Power unit IC for pagers
BH6111FV

The BH6111FV is a power unit IC with a driver for VFM switching regulator controllers and vibrators, LEDs, speakers, and LCD backlights. It has internal sensors to detect the reset voltage and battery ejection.

●Applications
Pagers

●Features
1) Internal VFM-type CMOS switching regulator and drivers for 6 channels.
2) Equipped with a reset voltage sensor and battery ejection sensor.

●Absolute maximum ratings (Ta=25℃)

Parameter	Symbol	Limits	Unit
Power supply voltage	V_{CC}	−0.3~+6.0	V
Driver output applied voltage	$V_{Max.}$	−0.3~+7.0	V
Power dissipation	Pd	※400	mW
Maximum driver output current (1)	$I_{OM}1$	500	mA
Maximum driver output current (2)	$I_{OM}2$	400	mA
Maximum driver output current (3)	$I_{OM}3$	300	mA
Operating temperature	T_{opr}	−15~+60	℃
Storage temperature	T_{stg}	−55~+125	℃

※ Reduced by 4 mW for each increase in Ta of 1℃ over 25℃.

●Recommended operating range

Parameter	Symbol	Limits	Unit
Power supply voltage	V_{CC}	0.9~2.5	V
Driver unit operation frequency	f_{drv}	DC~100	kHz

●Block diagram

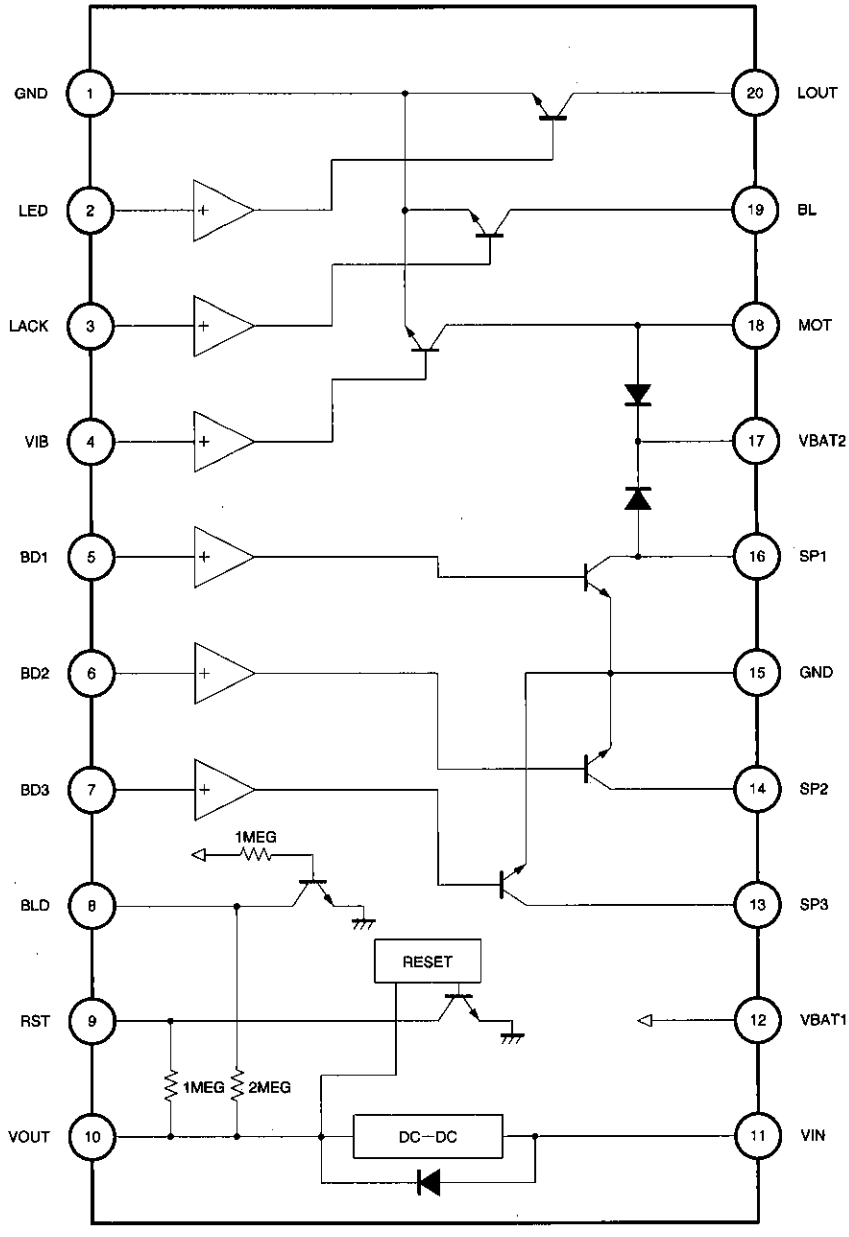

●Pin descriptions

Pin No.	Pin Name	I/O	Pin Voltage	Internal Equivalent Circuit	Function
1 15	GND 2 GND 1	I I	GND		Grounding pin
12 17	VBAT 1 VBAT 2	I I	VBAT		Battery pin
2 3 4 5 6 7	LED LACK VIB BD 1 BD 2 BD 3	I I I I I I	0V	VOUT 100k 100k GND	Driver input pin *1 *2 *3
13 14 19 20	SP 3 SP 2 BL LOUT	O O O O	—	VBAT 30k GND	Driver output pin
16 18	SP 1 MOT	O O	—	VBAT 30k GND	Driver output pin (internal Di for surge absorption)

*1 Driver unit input current (3 V system)
LED, LACK, VIB, BD1, BD2, BD3: 27 μA

*2 Driver unit current consumption (1.5 V system)
LED, LACK, SP2, SP3: 4.1 mA
SP1 : 4.7 mA
VIB : 5.6 mA

*3 Driver unit temperature characteristic
(Low level hold boundary voltage)

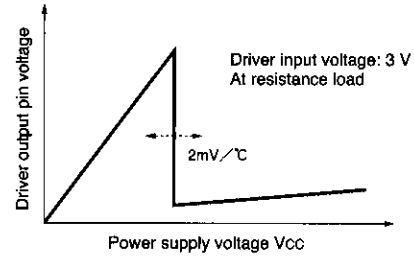

Pin No.	Pin Name	I/O	Pin Voltage	Internal Equivalent Circuit	Function
8	BLD	O	—	VOUT, VBAT, 2M, 1M, GND	Battery ejection voltage detection pin *4 (When battery is removed: HIGH) Current consumption 1.5 V system: 0.9 μA 3 V system : 1.5 μA
9	RST	O	—	VOUT, 1M, GND	CPU reset voltage detection pin *5 (When output power is reduced: LOW) Current consumption 3 V system: 1.8 μA
10	VOUT	O	3V	VOUT, VIN, GND	DC/DC converter output pin
11	VIN	I	—		DC/DC converter switching pin (internal Di for rectification)

*4 Operation theory for battery ejection circuit

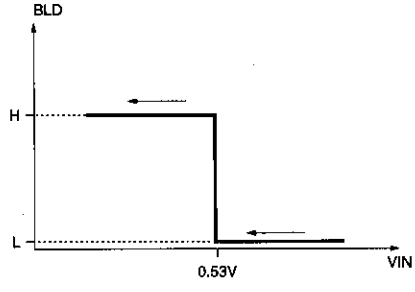

*5 Operation theory for CPU reset circuit

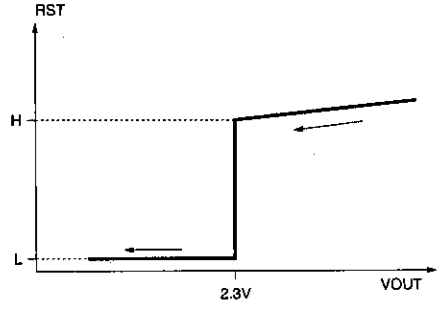

●Electrical characteristics (Unless otherwise noted, Ta=25℃, V_{DD}=1.5V)

Parameter	Symbol	Min.	Typ.	Max.	Unit	Conditions	Measurement Circuit
Overall circuit							
Quicient Current	Iin	–	34	60	μA	With no load on DC-DC converter	Fig.1
DC-DC converter unit							
Output voltage	Vout	2.85	3.00	3.08	V	Iout=1.0mA	Fig.1
Operation initiation power supply voltage	V_{ST}	–	0.85	0.9	V	Iout=1.0mA, V_{CC} ; 0V→2V	Fig.1
Operation sustain power supply voltage	V_{hld}	–	0.50	0.7	V	Iout=1.0mA, V_{CC} ; 2V→0V	Fig.1
Input voltage stability	△Vo1	–	20	100	mV	Iout=1.0mA, V_{CC}=0.9~2.5V	Fig.1
Load regulation	△Vo2	–	20	100	mV	Iout=0.1~5.0mA	Fig.1
Oscillation duty ratio	$Df_{Max.}$	–	70	–	%		Fig.1
Oscillation frequency	fosc	80	100	120	kHz		Fig.1
Efficiency	η	70	80	–	%	Iout=3.0mA	Fig.1
CPU reset circuit / battery ejection circuit unit							
Reset detection voltage	VRM	2.1	2.3	2.5	V		Fig.1
BLD detection voltage	VBLD	0.48	0.53	0.58	V	V_{CC} value when V8 pin is 1.5 V	Fig.1
"H" output voltage	VOH	2.7	3.0	–	V		Fig.1
"L" output voltage	VOL	–	0.1	0.4	V		Fig.1
Vibrator control unit							
Maximum output drive current	I_{OM}1	300	–	–	mA	V_{SAT}≦0.5V	Fig.1
Saturation voltage	Vsat1	–	0.2	0.3	V	Iout=195mA	Fig.1
Leakage current when off	IL1	–	0.0	5.0	μA	Vout=5V	Fig.1
Input threshold level	Vth1	1.0	1.4	1.8	V		Fig.1
Input current	Iin1	15	27	35	μA	Vin=3.0V	Fig.1
Speaker control unit 1							
Maximum output drive current	I_{OM}2	200	–	–	mA	V_{SAT}≦0.5V	Fig.1
Saturation voltage	Vsat2	–	0.1	0.2	V	Iout=90mA	Fig.1
Leakage current when off	IL2	–	0.0	5.0	μA	Vout=5V	Fig.1
Input threshold level	Vth2	1.0	1.4	1.8	V		Fig.1
Input current	Iin2	15	27	35	μA	Vin=3.0V	Fig.1
Speaker control units 2 and 3, LED control unit, LCD backlight control unit							
Maximum output drive current	I_{OM}3	100	–	–	mA	V_{SAT}≦0.5V	Fig.1
Saturation voltage	Vsat3	–	0.1	0.2	V	Iout=45mA	Fig.1
Leakage current when off	IL3	–	0.0	5.0	μA	Vout=5V	Fig.1
Input threshold level	Vth3	1.0	1.4	1.8	V		Fig.1
Input current	Iin3	15	27	35	μA	Vin=3.0V	Fig.1

●Measurement circuits

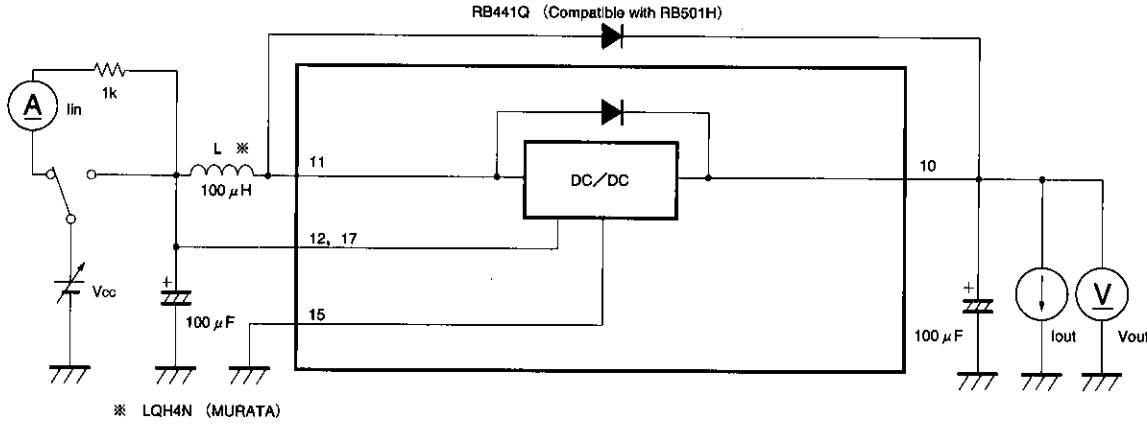

a. DC-DC converter unit

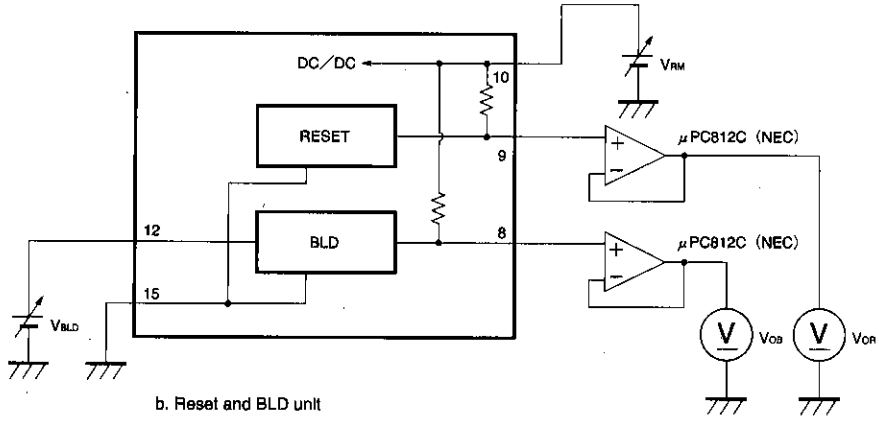

b. Reset and BLD unit

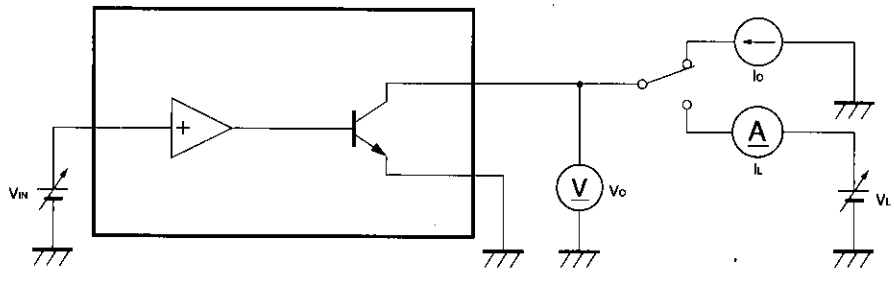

c. Driver unit

Fig. 1 Measurement circuits

●Application circuit

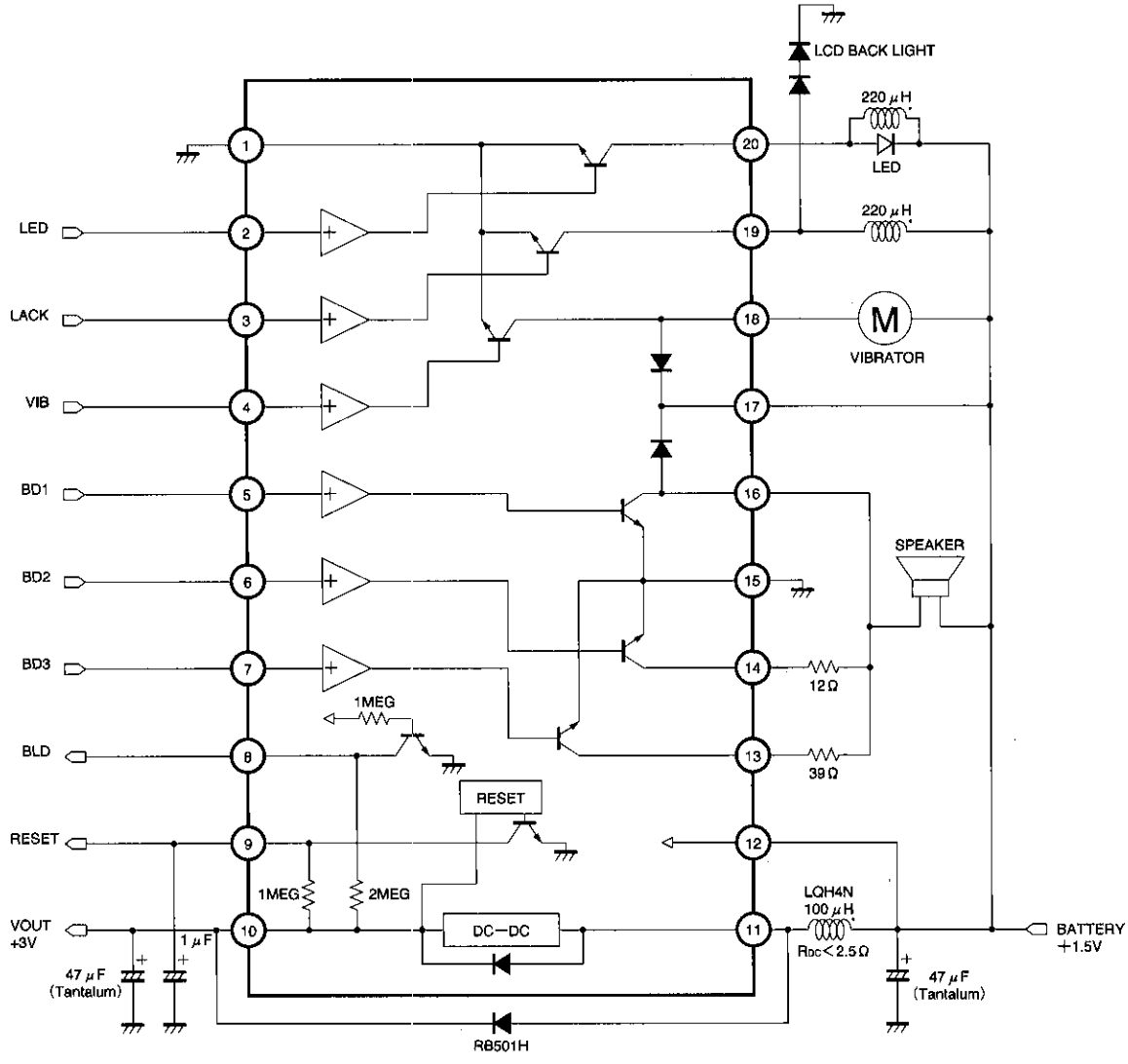

Fig. 2

●Electrical characteristic curves

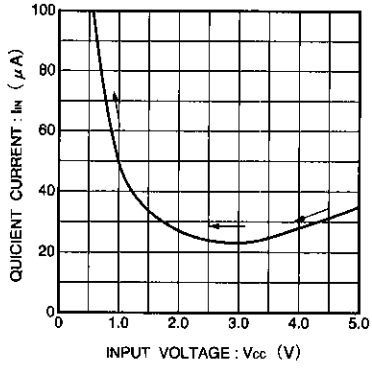

Fig. 3 Quicient current vs. input voltage characteristic

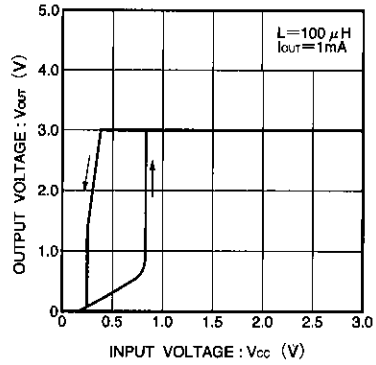

Fig. 4 DC/DC converter Output voltage vs. input voltage characteristic

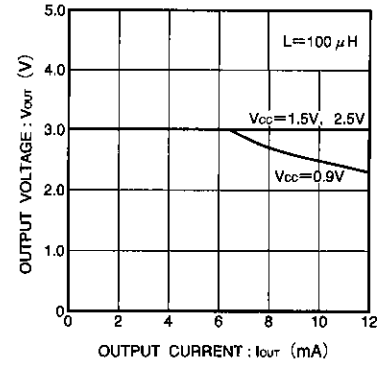

Fig. 5 DC/DC converter Output voltage vs. output current characteristic

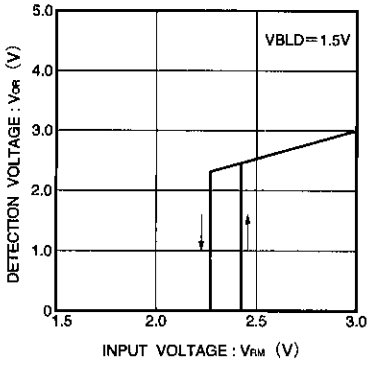

Fig. 6 Reset detection voltage

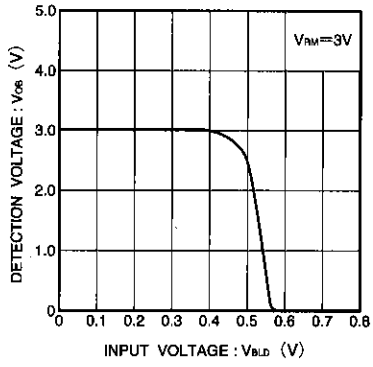

Fig. 7 BLD detection voltage

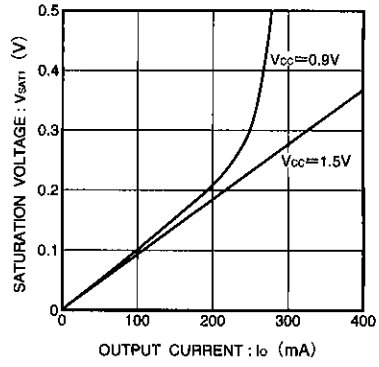

Fig. 8 Vibrator control unit Saturation voltage vs. output current characteristic

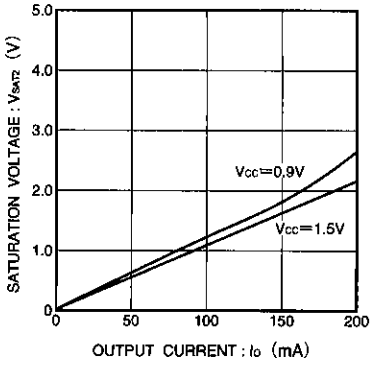

Fig. 9 Speaker control unit 1 Saturation voltage vs. output current characteristic

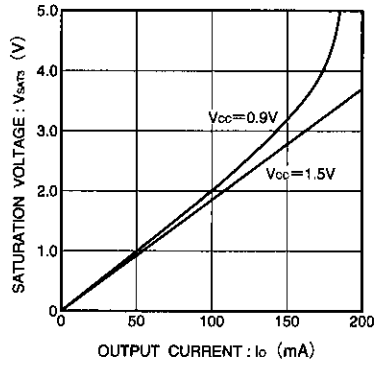

Fig. 10 Speaker control units 2 and 3, LED control unit, LCD backlight control unit Saturation voltage vs. output current characteristic

●External dimensions (Units: mm)

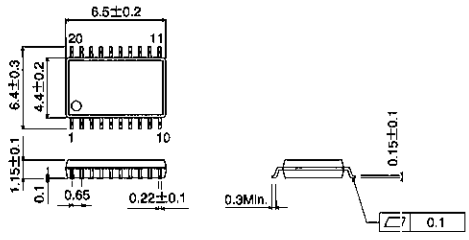

SSOP - B20

Notes

- The contents described in this catalogue are correct as of March 1997.
- No unauthorized transmission or reproduction of this book, either in whole or in part, is permitted.
- The contents of this book are subject to change without notice. Always verify before use that the contents are the latest specifications. If, by any chance, a defect should arise in the equipment as a result of use without verification of the specifications, ROHM CO., LTD., can bear no responsibility whatsoever.
- Application circuit diagrams and circuit constants contained in this data book are shown as examples of standard use and operation. When designing for mass production, please pay careful attention to peripheral conditions.
- Any and all data, including, but not limited to application circuit diagrams, information, and various data, described in this catalogue are intended only as illustrations of such devices and not as the specifications for such devices. ROHM CO., LTD., disclaims any warranty that any use of such device shall be free from infringement of any third party's intellectual property rights or other proprietary rights, and further, assumes absolutely no liability in the event of any such infringement, or arising from or connected with or related to the use of such devices.
- Upon the sale of any such devices; other than for the buyer's right to use such devices itself, resell or otherwise dispose of the same; no express or implied right or license to practice or commercially exploit any intellectual property rights or other proprietary rights owned or controlled by ROHM CO., LTD., is granted to any such buyer.
- The products in this manual are manufactured with silicon as the main material.
- The products in this manual are not of radiation resistant design.

The products listed in this catalogue are designed to be used with ordinary electronic equipment or devices (such as audio-visual equipment, office-automation equipment, communications devices, electrical appliances, and electronic toys). Should you intend to use these products with equipment or devices which require an extremely high level of reliability and the malfunction of which would directly endanger human life (such as medical instruments, transportation equipment, aerospace machinery, nuclear-reactor controllers, fuel controllers, or other safety devices) please be sure to consult with our sales representatives in advance.

- Notes when exporting
  - It is essential to obtain export permission when exporting any of the above products when it falls under the category of strategic material (or labor) as determined by foreign exchange or foreign trade control laws.
  - Please be sure to consult with our sales representatives to ascertain whether any product is classified as a strategic material.