HEX INVERTER

MC3108F • MC3008F
MC3108L • MC3008L,P

(54H04J) (74H04J,N)

CIRCUIT SCHEMATIC
1/6 OF CIRCUIT SHOWN

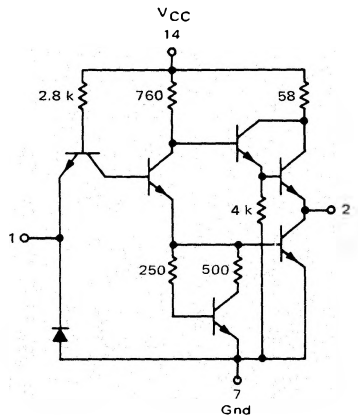

This device offers six independent inverting gates in a single package. Each gate consists of a single input driving an output inverter.

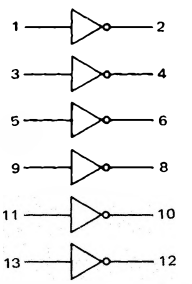

Positive Logic: $2 = \overline{1}$

Input Loading Factor = 1
Output Loading Factor = 10
Total Power Dissipation = 140 typ/pkg
Propagation Delay Time = 6 ns typ

Pin numbers for the 54H04F/74H04F device are shown in the chart. These devices are available on special request.

DEVICE	PIN NUMBERS													
MC3108F,L/3008F,L,P	1	2	3	4	5	6	7	8	9	10	11	12	13	14
54H04F/74H04F	1	14	3	2	5	6	11	8	7	10	9	12	13	14

SWITCHING TIME TEST CIRCUIT AND WAVEFORMS

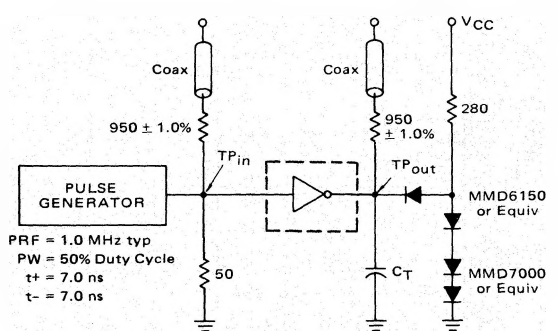

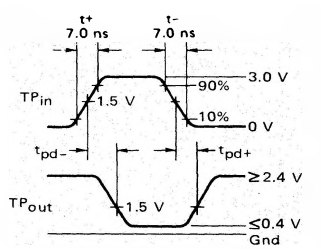

C_T = 25 pF = total parasitic capacitance, which includes probe, wiring, and load capacitances.

The coax delays from input to scope and output to scope must be matched. The scope must be terminated in 50-ohm impedance. The 950-ohm resistor and the scope termination impedance constitute a 20:1 attenuator probe. Coax shall be CT-070-50 or equivalent.

See General Information section for packaging.

ELECTRICAL CHARACTERISTICS

Test procedures are shown for only one inverter. The other inverters are tested in the same manner.

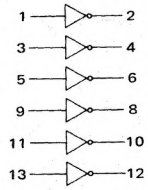

@ Test Temperature	I_{OL} (mA)	I_{OH} (mA)	I_{in} (mA)	I_D (mA)	V_{IL} (Volts)	V_{IH} (Volts)	V_F (Volts)	V_R (Volts)	V_{RH} (Volts)	V_{max} (Volts)	V_{CC} (Volts)	V_{CCL} (Volts)	V_{CCH} (Volts)
MC3108 −55°C	20	-2.0	-	-	1.1	2.0	0.4	2.4	4.0	-	5.0	4.5	5.5
MC3108 +25°C	20	-2.0	1.0	-10	1.1	1.8	0.4	2.4	4.0	7.0	5.0	4.5	5.5
MC3108 +125°C	20	-2.0	-	-	0.8	1.8	0.4	2.4	4.0	-	5.0	4.5	5.5
MC3008 0°C	20	-2.0	-	-	1.1	2.0	0.4	2.5	4.0	-	5.0	4.75	5.25
MC3008 +25°C	20	-2.0	1.0	-10	1.1	1.8	0.4	2.5	4.0	7.0	5.0	4.75	5.25
MC3008 +75°C	20	-2.0	-	-	0.9	1.8	0.4	2.5	4.0	-	5.0	4.75	5.25

Characteristic	Symbol	Pin Under Test	MC3108 Test Limits −55°C Min	MC3108 −55°C Max	MC3108 +25°C Min	MC3108 +25°C Max	MC3108 +125°C Min	MC3108 +125°C Max	MC3008 Test Limits 0°C Min	MC3008 0°C Max	MC3008 +25°C Min	MC3008 +25°C Max	MC3008 +75°C Min	MC3008 +75°C Max	Unit	TEST CURRENT / VOLTAGE APPLIED TO PINS LISTED BELOW: I_{OL}	I_{OH}	I_{in}	I_D	V_{IL}	V_{IH}	V_F	V_R	V_{RH}	V_{max}	V_{CC}	V_{CCL}	V_{CCH}	Gnd
Input Forward Current	I_F	1	-	-2.0	-	-2.0	-	-2.0	-	-2.0	-	-2.0	-	-2.0	mAdc	-	-	-	-	-	-	1	-	-	-	-	-	14	7*
Leakage Current	I_R	1	-	50	-	50	-	50	-	50	-	50	-	50	μAdc	-	-	-	-	-	-	-	1	-	-	-	-	14	7*
Breakdown Voltage	BV_{in}	1	-	-	5.5	-	-	-	-	-	5.5	-	-	-	Vdc	-	-	1	-	-	-	-	-	-	-	-	-	14	7*
Clamp Voltage	V_D	1	-	-	-	-1.5	-	-	-	-	-	-1.5	-	-	Vdc	-	-	-	1	-	-	-	-	-	-	-	14	-	7*
Output Output Voltage	V_{OL}	2	-	0.4	-	0.4	-	0.4	-	0.4	-	0.4	-	0.4	Vdc	2	-	-	-	-	1	-	-	-	-	-	14	-	7*
	V_{OH}	2	2.4	-	2.4	-	2.4	-	2.5	-	2.5	-	2.5	-	Vdc	-	2	-	-	1	-	-	-	-	-	-	14	-	7*
Short-Circuit Current	I_{SC}	2	-40	-100	-40	-100	-40	-100	-40	-100	-40	-100	-40	-100	mAdc	-	-	-	-	-	-	-	-	-	-	-	-	14	1,2,7*
Power Requirements (Total Device) Maximum Power Supply Current	I_{max}	14	-	-	-	37.5	-	-	-	-	-	37.5	-	-	mAdc	-	-	-	-	-	-	-	-	-	14	-	-	-	1,3,5,7,9 11,13
Power Supply Drain	I_{PDH}	14	-	58	-	58	-	58	-	58	-	58	-	58	mAdc	-	-	-	-	-	-	-	-	1,3,5,9, 11,13	-	-	-	14	7
	I_{PDL}	14	-	26	-	26	-	26	-	26	-	26	-	26	mAdc	-	-	-	-	-	-	-	-	-	-	-	-	14	1,3,5,7,9 11,13
Switching Parameters																Pulse In	Pulse Out												
Turn-On Delay	t_{pd+}	1,2	-	-	-	10	-	-	-	-	-	10	-	-	ns	1	2	-	-	-	-	-	-	-	-	14	-	-	7*
Turn-Off Delay	t_{pd-}	1,2	-	-	-	10	-	-	-	-	-	10	-	-	ns	1	2	-	-	-	-	-	-	-	-	14	-	-	7*

* Since this is an inverting gate, power drain is minimized by grounding the inputs to gates not under test.