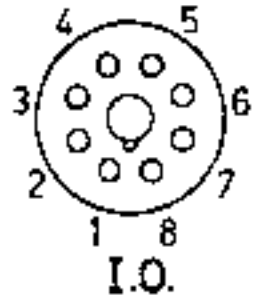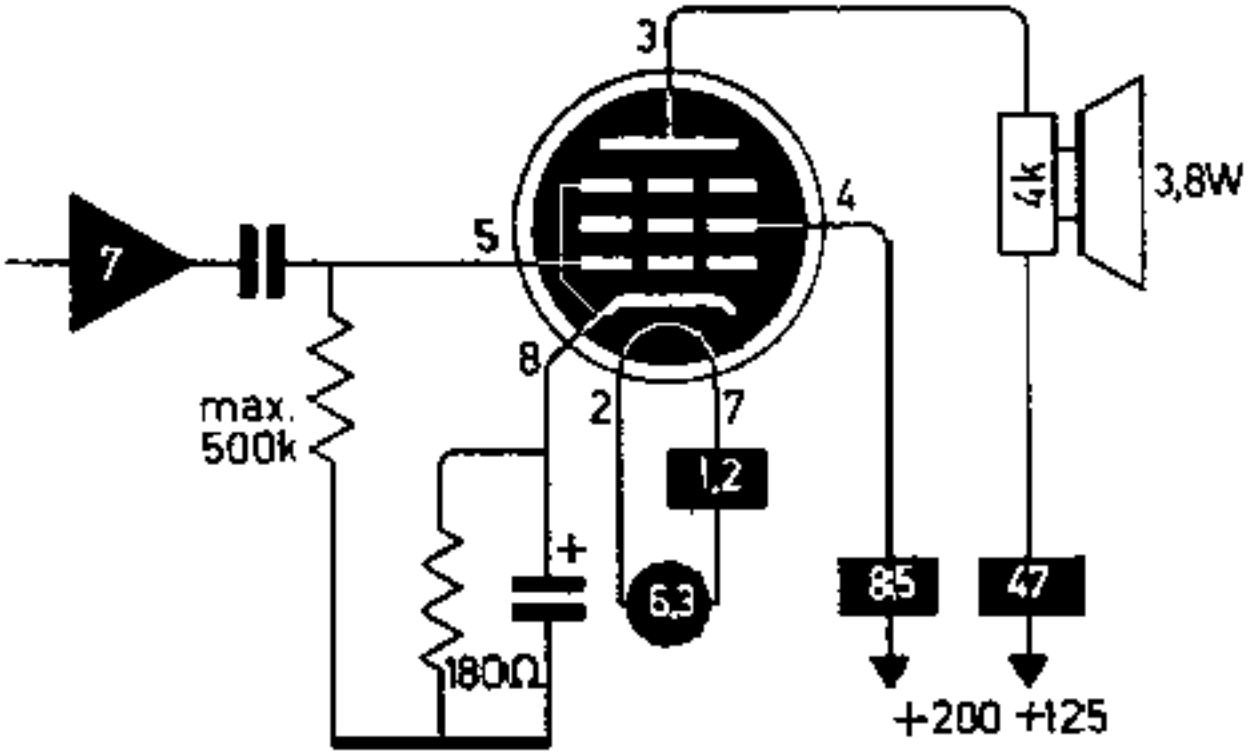S=8mA/V
Vg1=-10V
Ri=28k
Pa=max.10W