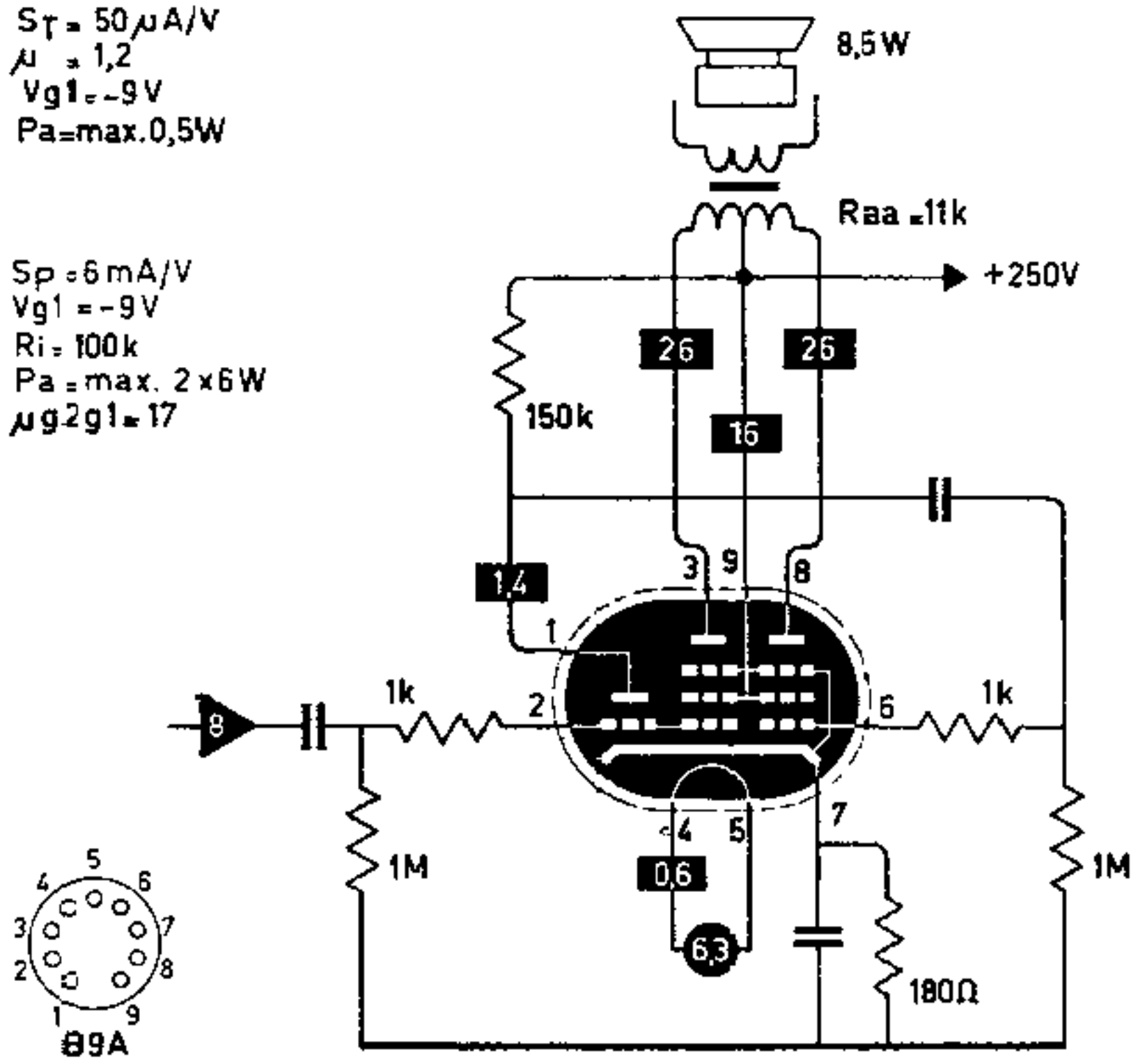
Sp = 50 µA/V
µ = 1,2
Vg1 = -9 V
Pa = max. 0,5W
Sp = 6 mA/V
Vg1 = -9 V
Ri = 100 k
Pa = max. 2 x 6 W
µg2g1 = 17
8,5 W
Raa = 11 k
+250V
26
26
16
150k
1,4
3
9
8
1
2
6
1k
1k
8
1M
1M
4
5
7
0,6
6,3
180Ω
5
4
6
3
7
2
8
1
9
89A