New Jersey Semi-Conductor Products, Inc.

20 STERN AVE.
SPRINGFIELD, NEW JERSEY 07081
U.S.A.

TELEPHONE: (201) 376-2922
(212) 227-6005
FAX: (201) 376-8960

2N3700 • 2N3701

NPN SMALL SIGNAL GENERAL PURPOSE AMPLIFIERS

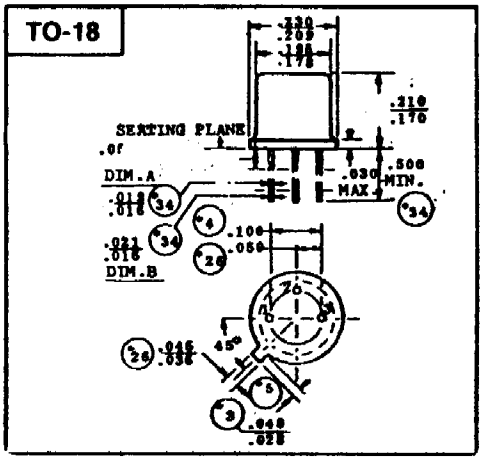

- V_{CEO} . . . 80 V (MIN) @ 30 mA
- $V_{CE(sat)}$ . . . 0.5 V (MAX)@ 500 mA

ABSOLUTE MAXIMUM RATINGS

Maximum Temperatures	
Storage Temperature	−65°C to +200°C
Operating Junction Temperature	200°C
Lead Temperature (60 seconds)	300°C
Maximum Power Dissipation	
Total Dissipation at 25°C Case Temperature	1.8 W
at 100°C Case Temperature	1.0 W
at 25°C Ambient Temperature	0.5 W
Maximum Voltages and Current	
V_{CBO} Collector to Base Voltage	140 V
V_{CEO} Collector to Emitter Voltage	80 V
V_{EBO} Emitter to Base Voltage	7.0 V
I_C Collector Current	1.0 A

ELECTRICAL CHARACTERISTICS (25°C Ambient Temperature unless otherwise noted)

SYMBOL	CHARACTERISTIC	2N3700 MIN.	2N3700 MAX.	2N3701 MIN.	2N3701 MAX.	UNITS	TEST CONDITIONS
h_{FE}	DC Pulse Current Gain (Note 5)	100	300	40	120		I_C = 150 mA, V_{CE} = 10 V
		90		40	120		I_C = 10 mA, V_{CE} = 10 V
		50		30	100		I_C = 0.1 mA, V_{CE} = 10 V
		50		30	100		I_C = 500 mA, V_{CE} = 10 V
		15		15			I_C = 1.0 A, V_{CE} = 10 V
		40					I_C = 150 mA, V_{CE} = 10 V, T_A = −55°C
$V_{BE(sat)}$	Pulsed Base Saturation Voltage		1.1		1.1	V	I_C = 150 mA, I_B = 15 mA
$V_{CE(sat)}$	Pulsed Collector Saturation		0.2		0.2	V	I_C = 150 mA, I_B = 15 mA
	Voltage (Note 5)		0.5		0.5	V	I_C = 500 mA, I_B = 50 mA
h_{fe}	High Frequency Current Gain	5.0	10	4.0	10		I_C = 50 mA, V_{CE} = 10 V, f = 20 MHz
h_{fe}	Small Signal Current Gain	80	400	30	200		I_C = 1.0 mA, V_{CE} = 5.0 V, f = 1.0 kHz
C_{ob}	Output Capacitance		12		12	pF	I_E = 0, V_{CB} = 10 V, f = 1.0 MHz
C_{ib}	Input Capacitance		60		60	pF	I_C = 0, V_{EB} = 0.5 V, f = 1.0 MHz
$r_b'C_c$	Collector to Base Time Constant	25	400	25	400	ps	I_C = 10 mA, V_{CB} = 10 V, f = 4.0 MHz
I_{CBO}	Collector Cutoff Current		10		10	nA	I_E = 0, V_{CB} = 90 V
			10		10	μA	I_E = 0, V_{CB} = 90 V, T_A = 150°C
I_{EBO}	Emitter Cutoff Current		10		10	nA	I_C = 0, V_{EB} = 5.0 V
BV_{CBO}	Collector to Base Breakdown Voltage	140		140		V	I_C = 100 μA, I_E = 0
$V_{CEO(sus)}$	Collector to Emitter Sustaining Voltage (Notes 4 & 5)	80		80		V	I_C = 30 mA, I_B = 0
BV_{EBO}	Emitter to Base Breakdown Voltage	7.0		7.0		V	I_C = 0, I_E = 100 μA
NF	Noise Figure		4.0			dB	I_C = 100 μA, V_{CE} = 10 V, f = 1.0 kHz, R_G = 1.0 kΩ