New Jersey Semi-Conductor Products, Inc.

20 STERN AVE.
SPRINGFIELD, NEW JERSEY 07081
U.S.A.

TELEPHONE: (973) 376-2922
(212) 227-6005
FAX: (973) 376-8960

2SD1979

Silicon NPN epitaxial planar type

For low-voltage output amplification
For muting
For DC-DC converter

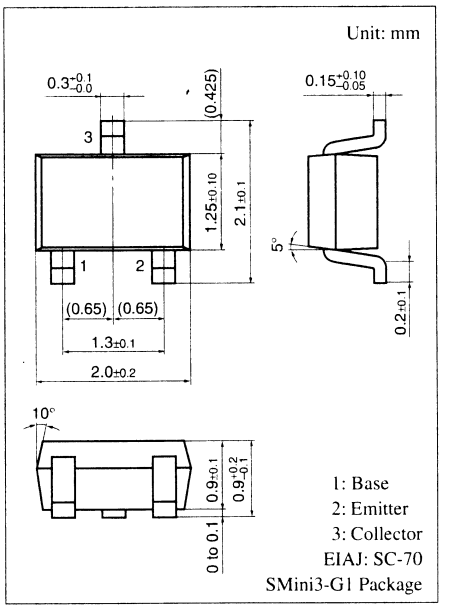

Marking symbol: 3W

■ Features

- Low ON resistance R_{on}
- High forward current transfer ratio h_{FE}
- S-Mini type package, allowing downsizing of the equipment and automatic insertion through the tape packing and the magazine packing.

■ Absolute Maximum Ratings $T_a = 25°C$

Parameter	Symbol	Rating	Unit
Collector-base voltage (Emitter open)	V_{CBO}	50	V
Collector-emitter voltage (Base open)	V_{CEO}	20	V
Emitter-base voltage (Collector open)	V_{EBO}	25	V
Collector current	I_C	300	mA
Peak collector current	I_{CP}	500	mA
Collector power dissipation	P_C	150	mW
Junction temperature	T_j	150	°C
Storage temperature	T_{stg}	−55 to +150	°C

■ Electrical Characteristics $T_a = 25°C \pm 3°C$

Parameter	Symbol	Conditions	Min	Typ	Max	Unit
Collector-emitter voltage (Base open)	V_{CEO}	$I_C = 1$ mA, $I_B = 0$	20			V
Base-emitter voltage	V_{BE}	$V_{CE} = 2$ V, $I_C = 4$ mA		0.6		V
Collector-base cutoff current (Emitter open)	I_{CBO}	$V_{CB} = 50$ V, $I_E = 0$			1	μA
Emitter-base cutoff current (Collector open)	I_{EBO}	$V_{EB} = 25$ V, $I_C = 0$			1	μA
Forward current transfer ratio *1	h_{FE}	$V_{CE} = 2$ V, $I_C = 4$ mA	500		2 500	—
Collector-emitter saturation voltage	$V_{CE(sat)}$	$I_C = 30$ mA, $I_B = 3$ mA			0.1	V
Transition frequency	f_T	$V_{CB} = 6$ V, $I_E = -4$ mA, f = 200 MHz		80		MHz
Collector output capacitance (Common base, input open circuited)	C_{ob}	$V_{CB} = 10$ V, $I_E = 0$, f = 1 MHz		4.5		pF
ON resistance *2	R_{on}			1		Ω

Note) 1. Measuring methods are based on JAPANESE INDUSTRIAL STANDARD JIS C 7030 measuring methods for transistors.
2. *1: Rank classification

Rank	S	T
h_{FE}	500 to 1 500	800 to 2 500

*2: R_{on} Measuremet circuit

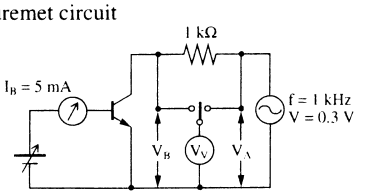

$$R_{on} = \frac{V_B}{V_A - V_B} \times 1\,000\ (\Omega)$$

NJ Semi-Conductors reserves the right to change test conditions, parameter limits and package dimensions without notice. Information furnished by NJ Semi-Conductors is believed to be both accurate and reliable at the time of going to press. However NJ Semi-Conductors assumes no responsibility for any errors or omissions discovered in its use. NJ Semi-Conductors encourages customers to verify that datasheets are current before placing orders.