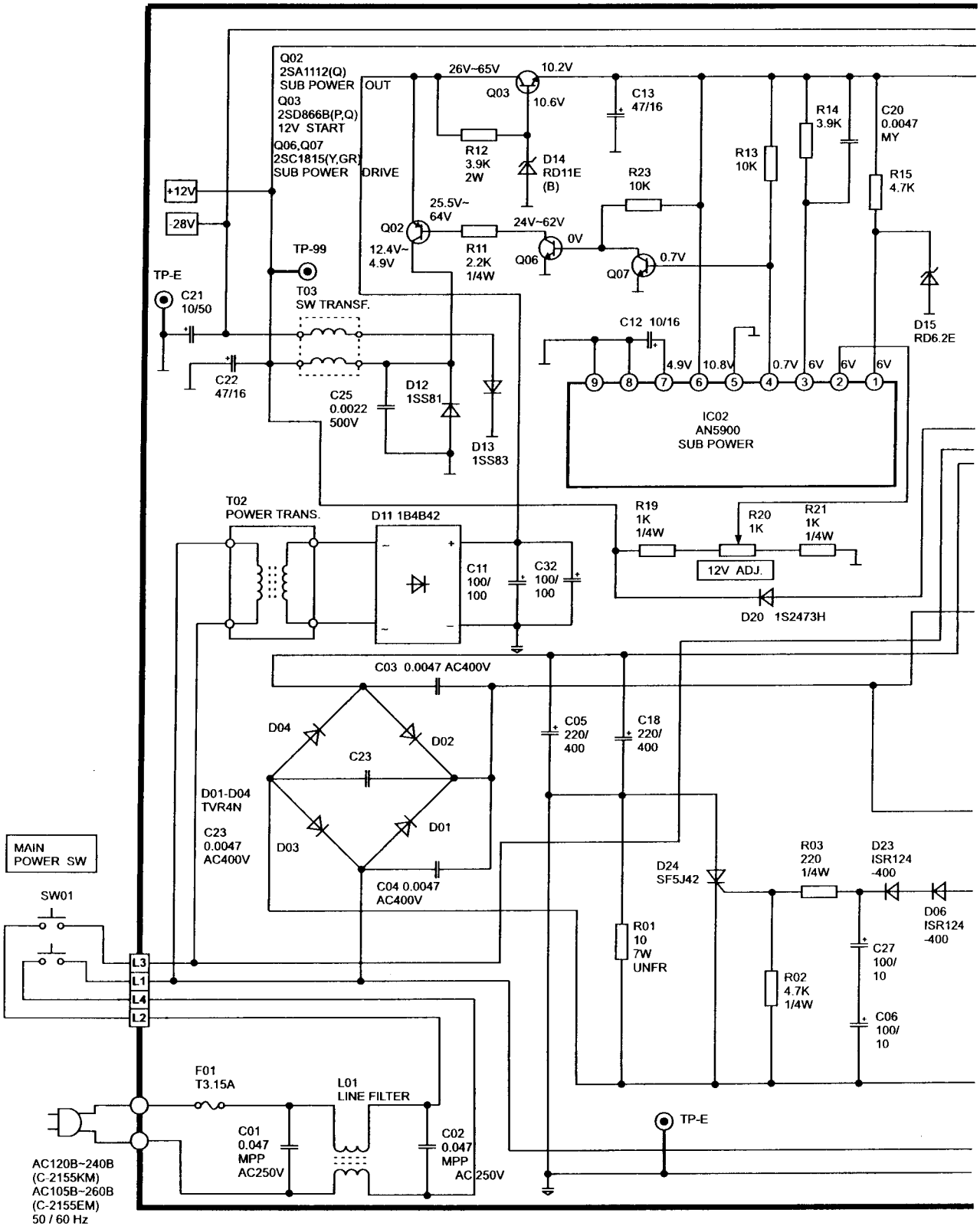
Q02
2SA1112(Q)
SUB POWER
Q03
2SD866B(P,Q)
12V START
Q06,Q07
2SC1815(Y,GR)
SUB POWER
OUT
DRIVE
26V~65V
10.2V
Q03
10.6V
C13
47/16
R12
3.9K
2W
D14
RD11E
(B)
R13
10K
R14
3.9K
C20
0.0047
MY
R15
4.7K
R23
10K
+12V
-28V
25.5V~
64V
Q02
24V~62V
0V
12.4V~
4.9V
R11
2.2K
1/4W
Q06
Q07
0.7V
TP-99
TP-E
C21
10/50
T03
SW TRANSF.
C12 10/16
D15
RD6.2E
4.9V
10.8V
0.7V
6V
6V
6V
C22
47/16
C25
0.0022
500V
D12
1SS81
D13
1SS83
IC02
AN5900
SUB POWER
T02
POWER TRANS.
D11 1B4B42
R19
1K
1/4W
R20
1K
R21
1K
1/4W
12V ADJ.
C11
100/
100
C32
100/
100
D20 1S2473H
C03 0.0047 AC400V
D04
D02
C23
C05
220/
400
C18
220/
400
D01-D04
TVR4N
C23
0.0047
AC400V
D03
D01
C04 0.0047
AC400V
MAIN
POWER SW
SW01
D24
SF5J42
R03
220
1/4W
D23
ISR124
-400
D06
ISR124
-400
R01
10
7W
UNFR
C27
100/
10
R02
4.7K
1/4W
C06
100/
10
L3
L1
L4
L2
F01
T3.15A
L01
LINE FILTER
TP-E
C01
0.047
MPP
AC250V
C02
0.047
MPP
AC250V
AC120B~240B
(C-2155KM)
AC105B~260B
(C-2155EM)
50 / 60 Hz

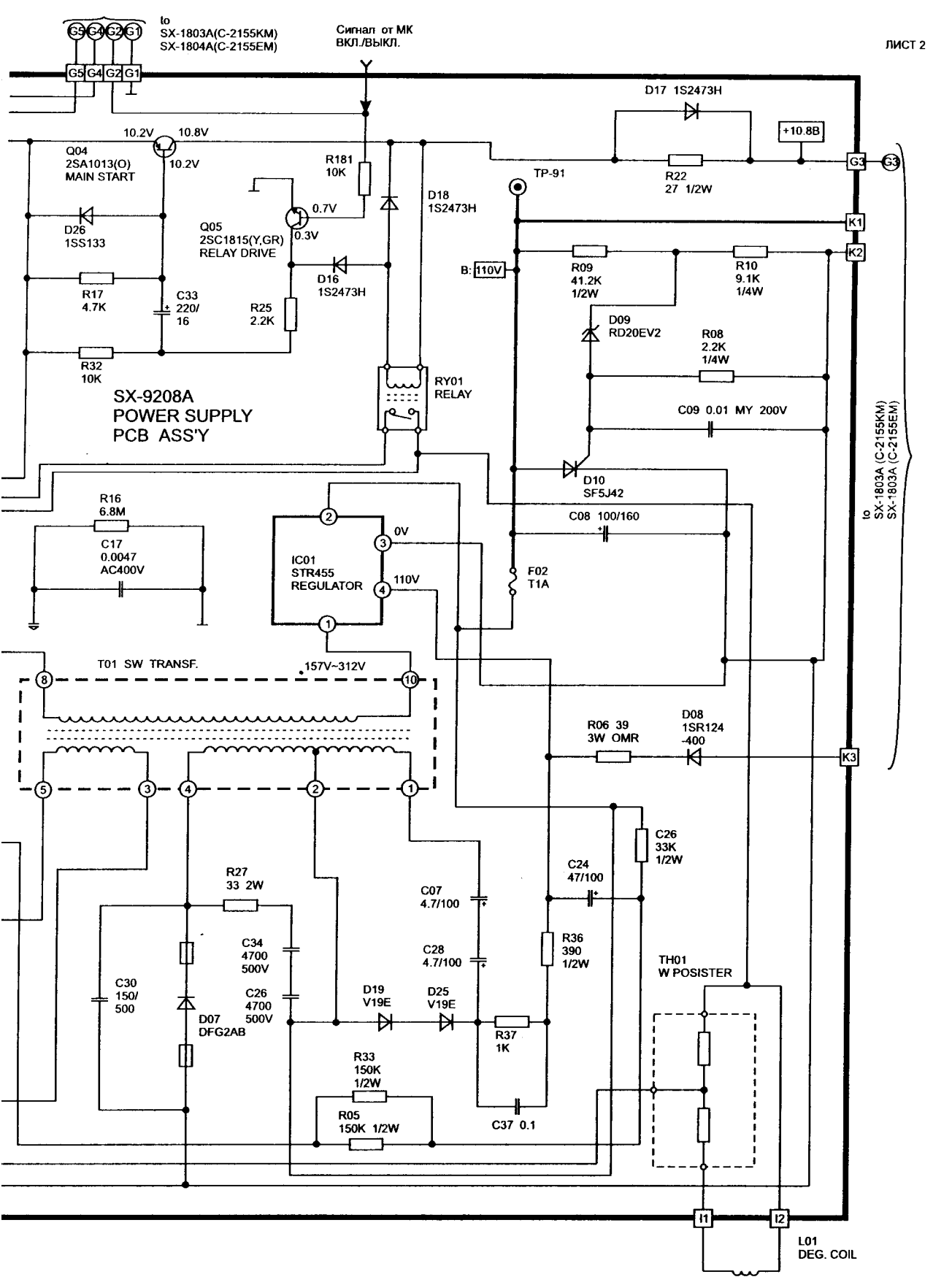
ЛИСТ 2
to
SX-1803A(C-2155KM)
SX-1804A(C-2155EM)
Сигнал от МК
ВКЛ./ВЫКЛ.
G5 G4 G2 G1
D17 1S2473H
+10.8В
10.2V
10.8V
Q04
2SA1013(O)
MAIN START
R181
10K
R22
27 1/2W
G3
S3
TP-91
D18
1S2473H
0.7V
0.3V
Q05
2SC1815(Y,GR)
RELAY DRIVE
D26
1SS133
K1
K2
B: 110V
R09
41.2K
1/2W
R10
9.1K
1/4W
D16
1S2473H
R17
4.7K
C33
220/
16
R25
2.2K
D09
RD20EV2
R08
2.2K
1/4W
R32
10K
RY01
RELAY
SX-9208A
POWER SUPPLY
PCB ASS'Y
C09 0.01 MY 200V
D10
SF5J42
R16
6.8M
C08 100/160
C17
0.0047
AC400V
IC01
STR455
REGULATOR
0V
110V
F02
T1A
T01 SW TRANSF.
157V~312V
R06 39
3W OMR
D08
1SR124
-400
K3
to
SX-1803A (C-2155KM)
SX-1803A (C-2155EM)
C26
33K
1/2W
C24
47/100
R27
33 2W
C07
4.7/100
C34
4700
500V
C28
4.7/100
R36
390
1/2W
TH01
W POSISTER
C30
150/
500
C26
4700
500V
D19
V19E
D25
V19E
D07
DFG2AB
R37
1K
R33
150K
1/2W
R05
150K 1/2W
C37 0.1
I1
I2
L01
DEG. COIL