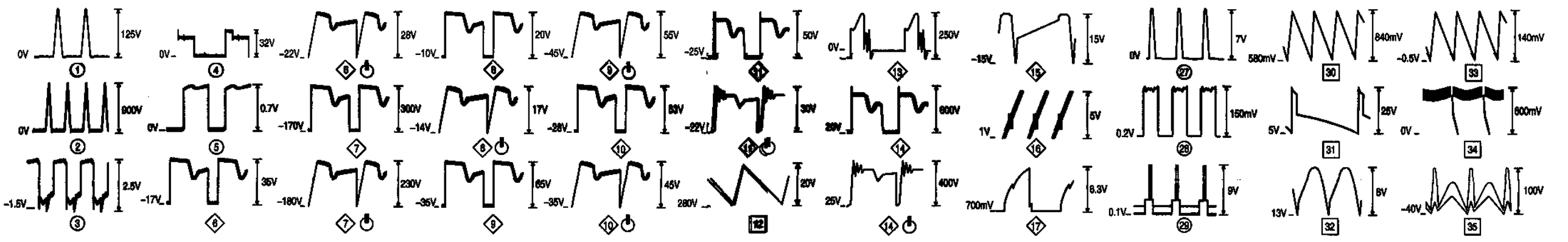
0V 125V 1
0V 32V 4
-22V 28V 6
-10V 20V 8
-45V 55V 9
-25V 50V 11
0V 250V 13
-15V 15V 15
0V 7V 27
580mV 840mV 30
-0.5V 140mV 33
0V 900V 2
0V 0.7V 5
-170V 300V 7
-14V 17V 8
-28V 53V 10
-22V 30V 12
-39V 600V 14
1V 5V 16
0.2V 150mV 28
5V 25V 31
0V 600mV 34
-1.5V 2.5V 3
-17V 35V 6
-180V 230V 7
-35V 65V 9
-35V 45V 10
280V 20V 12
25V 400V 14
700mV 6.3V 17
0.1V 9V 29
13V 6V 32
-40V 100V 35

1001-2B SYNCHRONZACJA

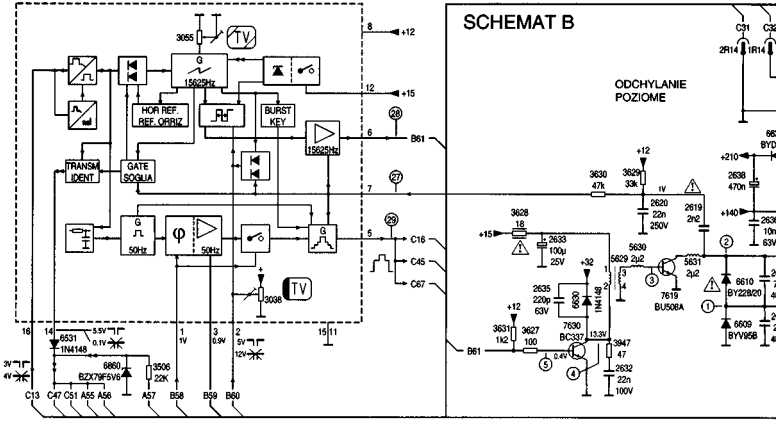

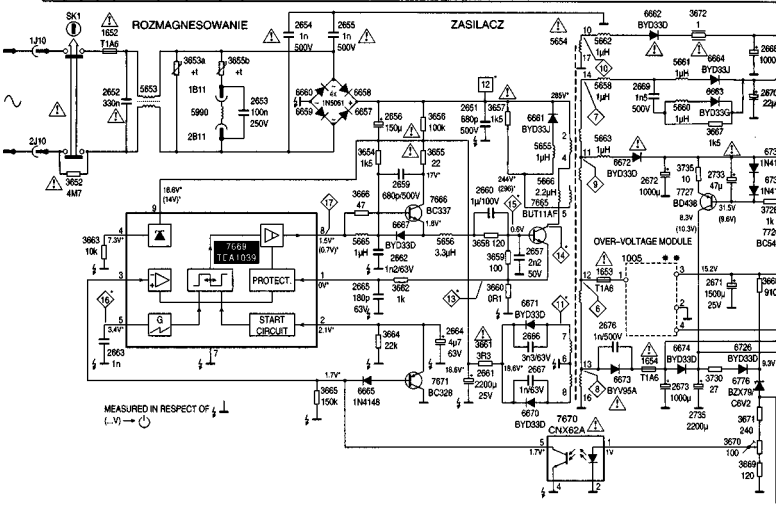

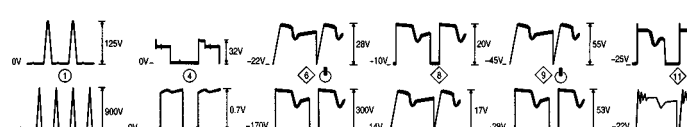

G90–G110–CP90–CP110 EUROPE & NORDIQUE
TTX–DECODER

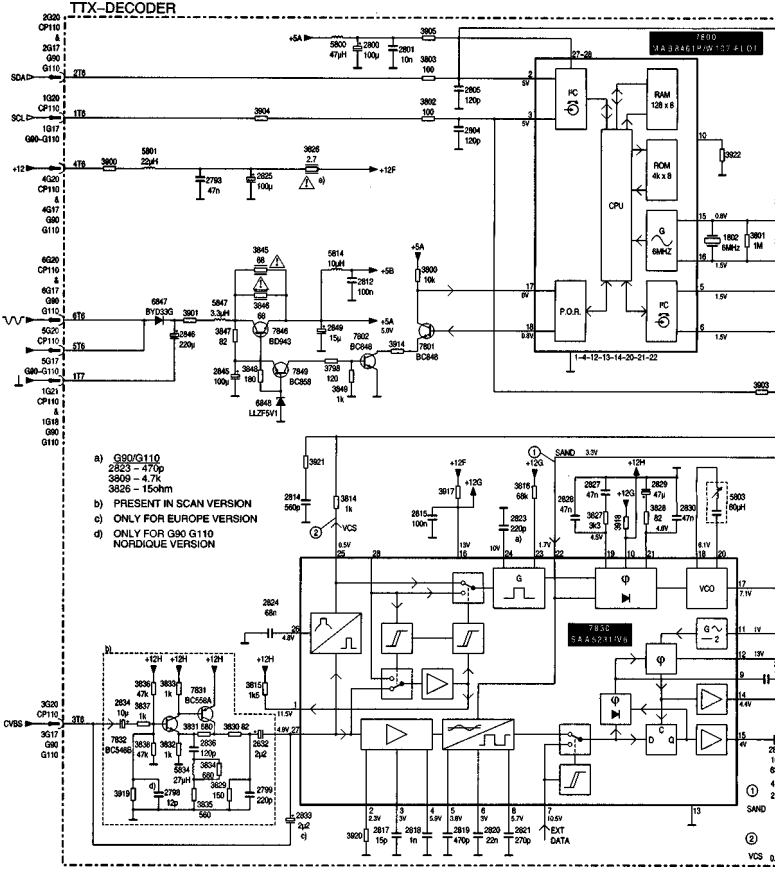

OTVC Philips chassis CP 110 strona

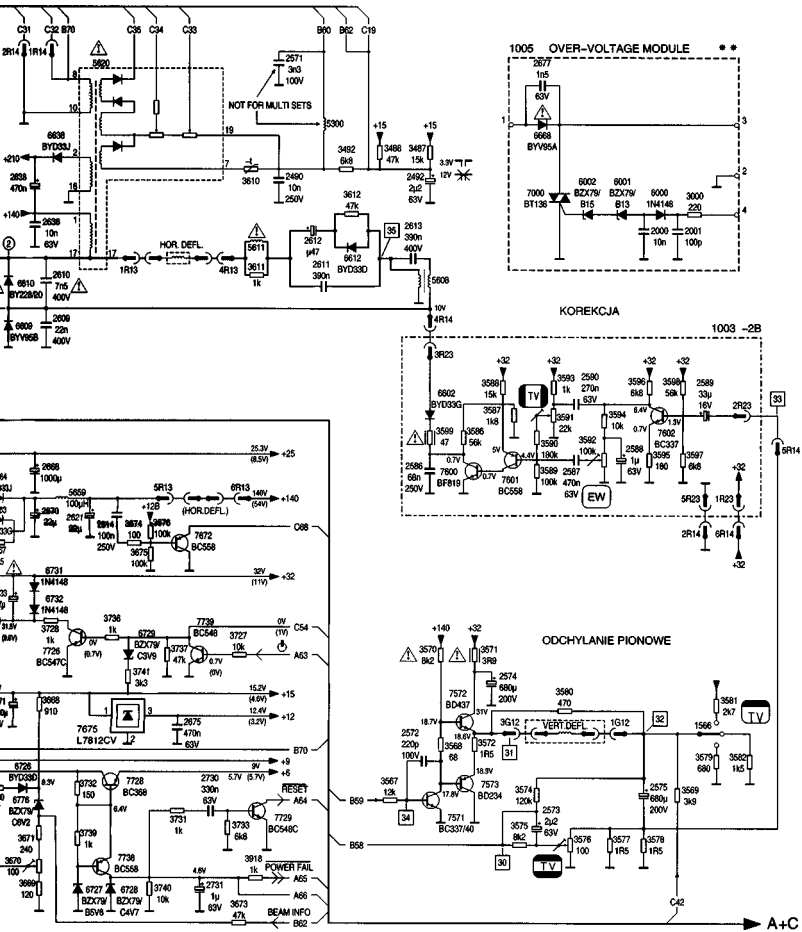
1005 OVER-VOLTAGE MODULE
KOREKCJA
1003 -2B
ODCHYLANIE PIONOWE
NOT FOR MULTI SETS
HOR. DEFL.
(HOR.DEFL.)
VERT.DEFL.
RESET
POWER FAIL
BEAM INFO
A+C

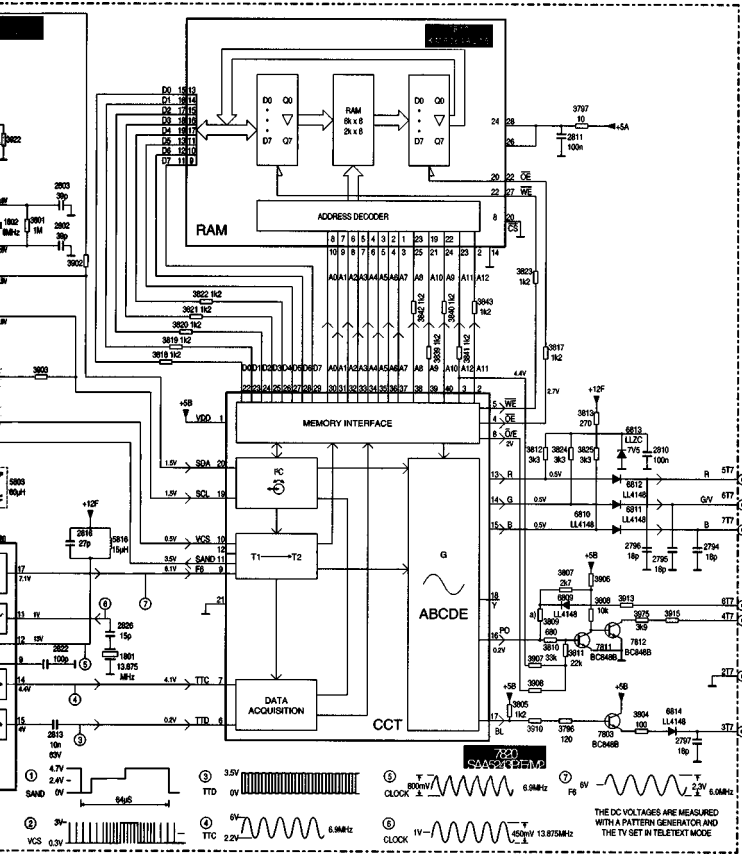
RAM
ADDRESS DECODER
MEMORY INTERFACE
I²C
T1 → T2
DATA ACQUISITION
ABCDE
CCT
THE DC VOLTAGES ARE MEASURED WITH A PATTERN GENERATOR AND THE TV SET IN TELETEXT MODE

trona 1/2

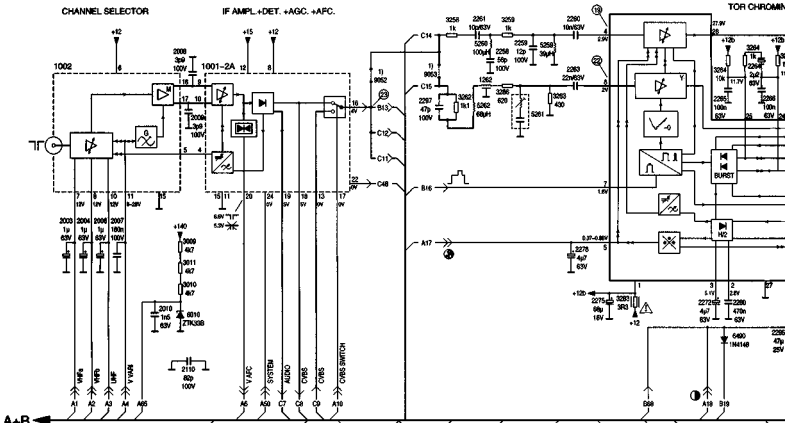
CHANNEL SELECTOR
IF AMPL.+DET. +AGC. +AFC.
TOR CHROMIN
1002
1001-2A
BURST
A+B
SCHEMAT C
AUDIO
SCART STATUS
RGB BLANKING
CVBS
RCS
G/Y
R
V AFC
SYSTEM
CVBS SWITCH
MPA
MPB
UHF
VHF A
REMARKS:
1) -NOT PRESENT FOR PAL/SECAM SETS
2) -FOR VERSION
3) -ONLY FOR MULTI-SETS
4) -ONLY FOR AMTS/SLATT VERSION
X - PRESENT
- - NOT PRESENT
1103
1104
2109
5109
9039
SCART CONNECTOR
1005
TXT-DEC
SECAM T

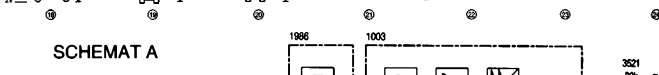
400mV
700mV
145mV
110mV
340mV
1.75V

SCHEMAT A

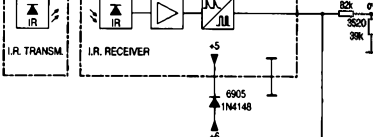
1986
1003
I.R. TRANSM.
I.R. RECEIVER
6905
1N4148
3521
82k
3520
39k

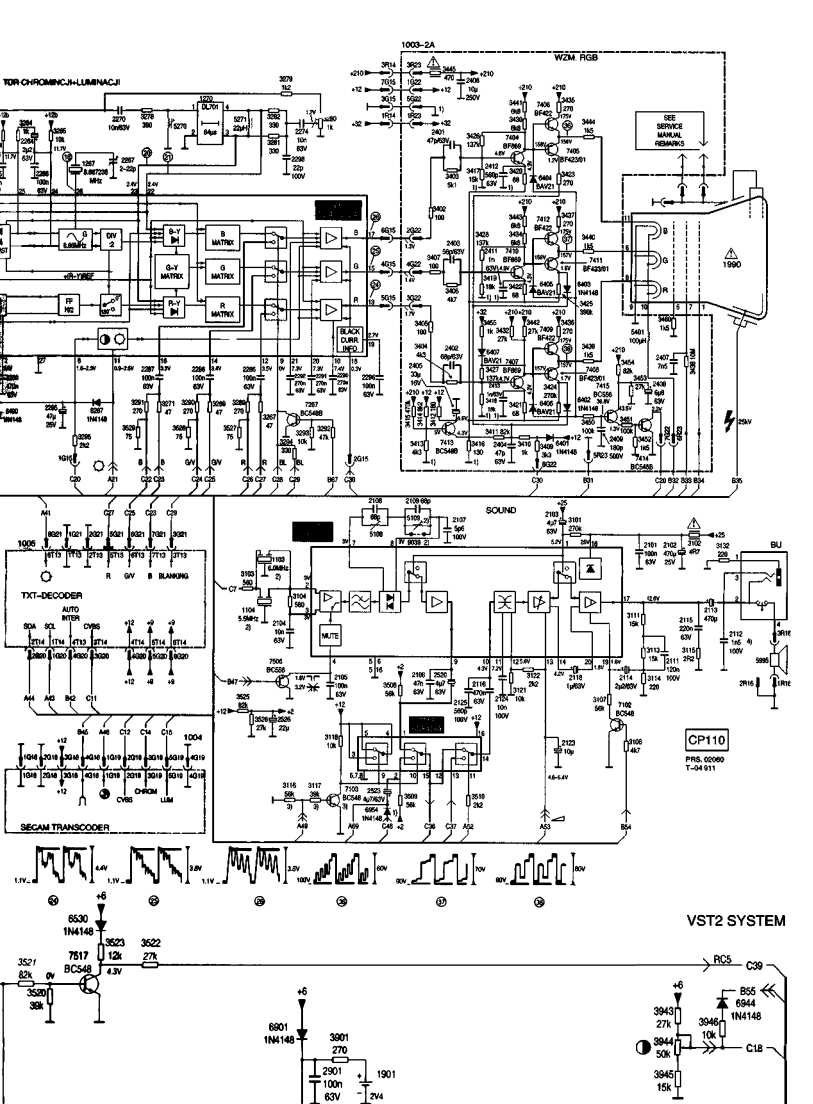
1003-2A
WZM RGB
SEE SERVICE MANUAL REMARKS
TDR-CHROMINCJI-LUMINACJI
B MATRIX
G MATRIX
R MATRIX
B-Y
G-Y MATRIX
R-Y
BLACK CURR INFO
SOUND
MUTE
TXT-DECODER
AUTO INTER
SECAM TRANSCODER
CP110
PRS. 02060
T-04911
VST2 SYSTEM

OTVC Philips chassis CP 110

strona 2/2

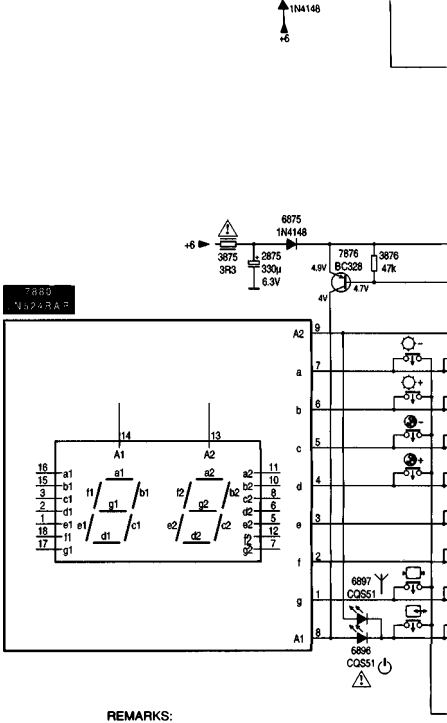

REMARKS:
1) PRESENT IN UHF-ONLY SETS
2) NOT PRESENT IN UHF-ONLY SETS
3) PRESENT IN MULTI-FRANCE SETS

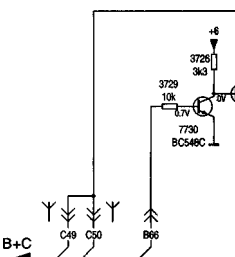

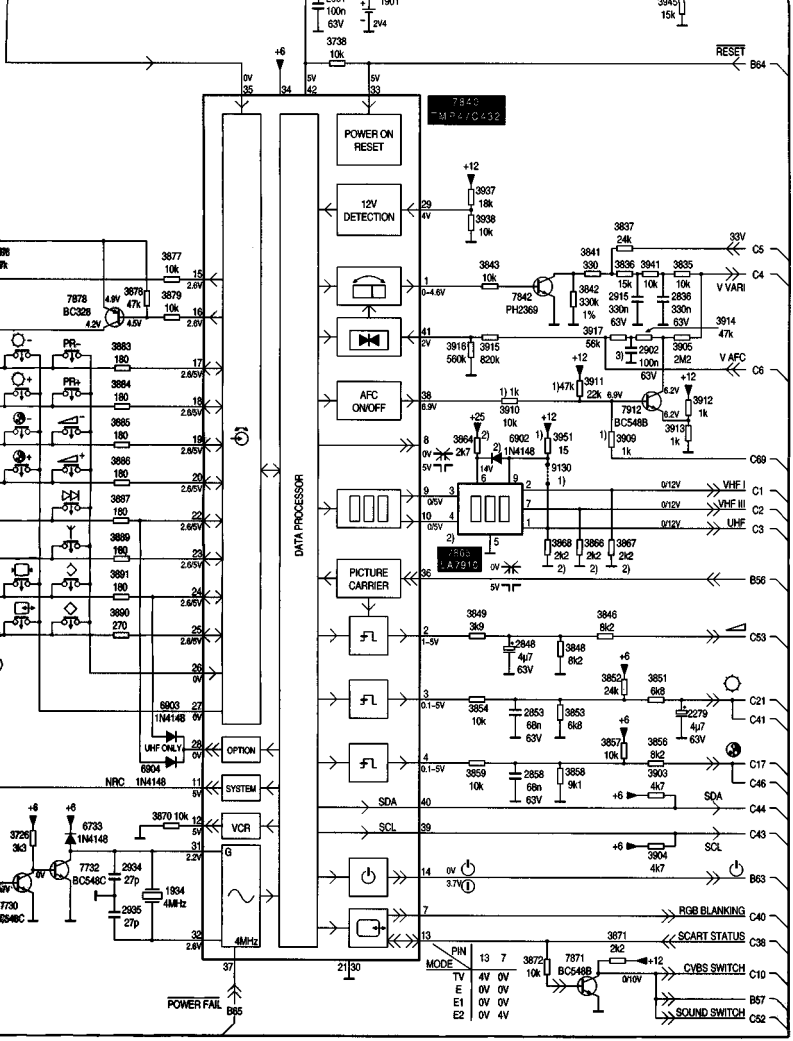
7840
TMP47C432
POWER ON RESET
12V DETECTION
AFC ON/OFF
PICTURE CARRIER
DATA PROCESSOR
OPTION
SYSTEM
VCR
4MHz
RESET
B64
V VARI
V AFC
VHF I
VHF III
UHF
SDA
SCL
RGB BLANKING
SCART STATUS
CVBS SWITCH
SOUND SWITCH
POWER FAIL
B65
7842
PH2369
7912
BC548B
7871
BC548B
7878
BC328
7732
BC548C
2903
LA7910
6903
1N4148
6904
1N4148
6733
1N4148
PR-
PR+
UHF ONLY
NRC 1N4148
PIN
MODE
13 7
TV 4V 0V
E 0V 0V
E1 0V 0V
E2 0V 4V

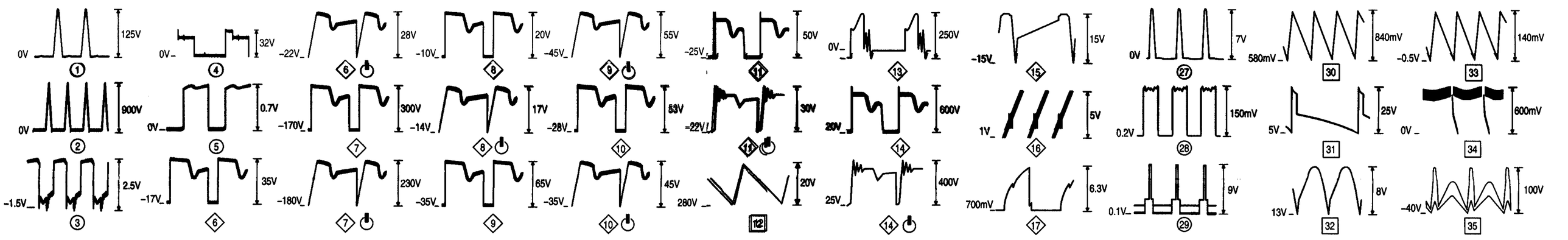
0V 125V 1
0V 32V 4
-22V 28V 6
-10V 20V 8
-45V 55V 9
-25V 50V 11
0V 250V 13
-15V 15V 15
0V 7V 27
580mV 840mV 30
-0.5V 140mV 33
0V 900V 2
0V 0.7V 5
-170V 300V 7
-14V 17V 8
-28V 53V 10
-22V 30V 11
20V 600V 14
1V 5V 16
0.2V 150mV 28
5V 25V 31
0V 600mV 34
-1.5V 2.5V 3
-17V 35V 6
-180V 230V 7
-35V 65V 9
-35V 45V 10
280V 20V 12
25V 400V 14
700mV 6.3V 17
0.1V 9V 29
13V 8V 32
-40V 100V 35

1001-2B SYNCHRONZACJA

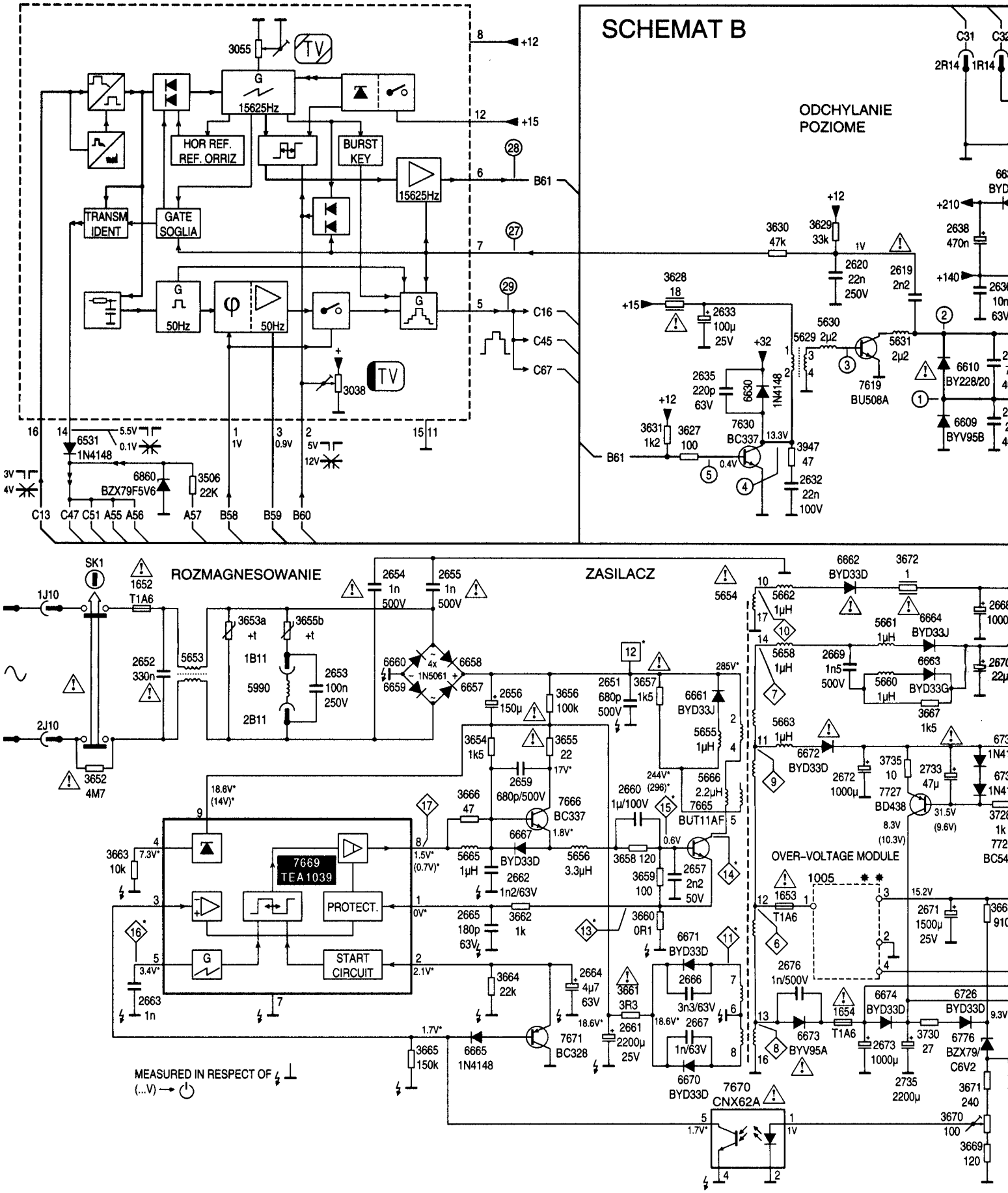

G90-G110-CP90-CP110 EUROPE & NORDIQUE
TTX-DECODER

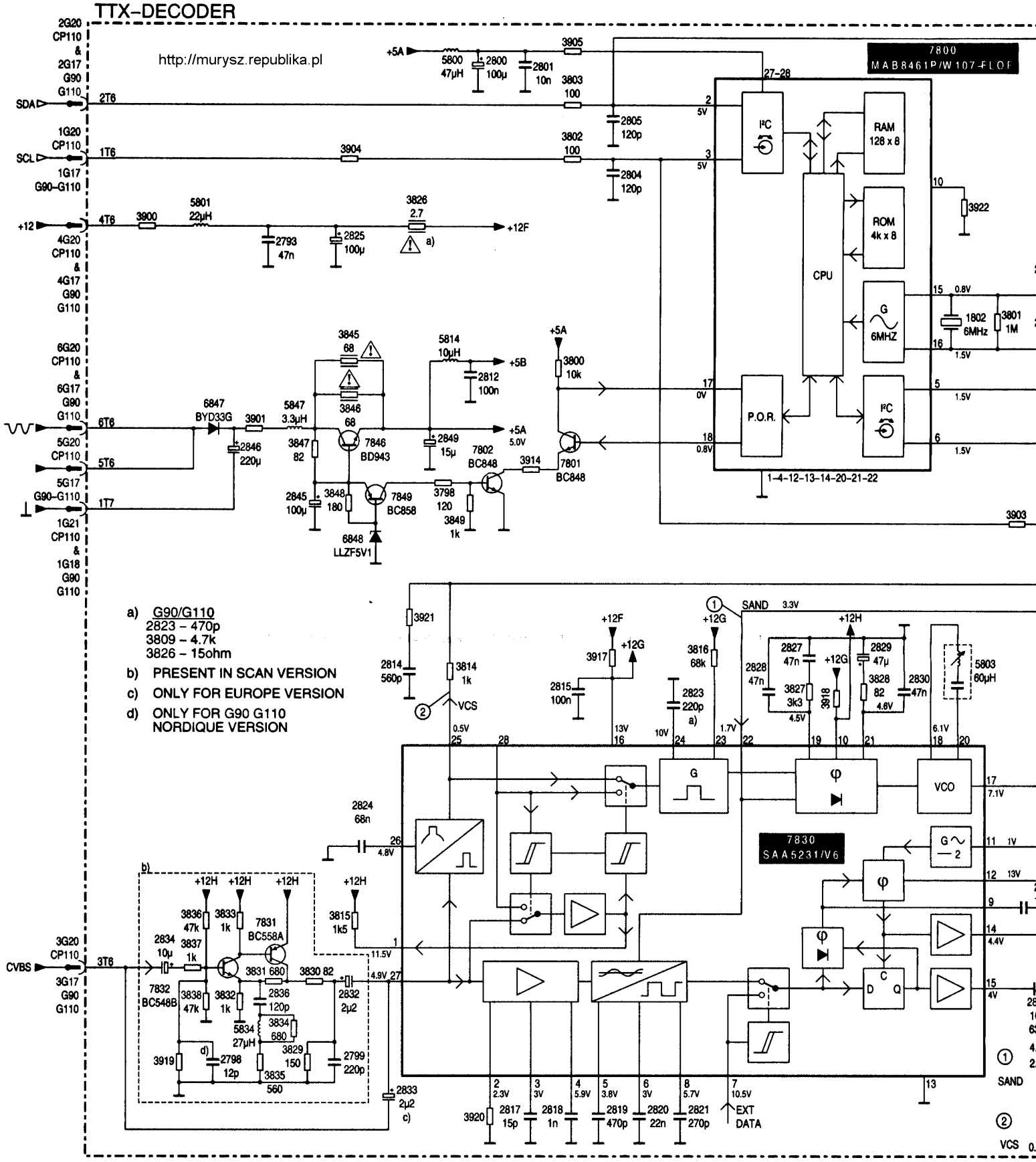

OTVC Philips chassis CP 110 stron

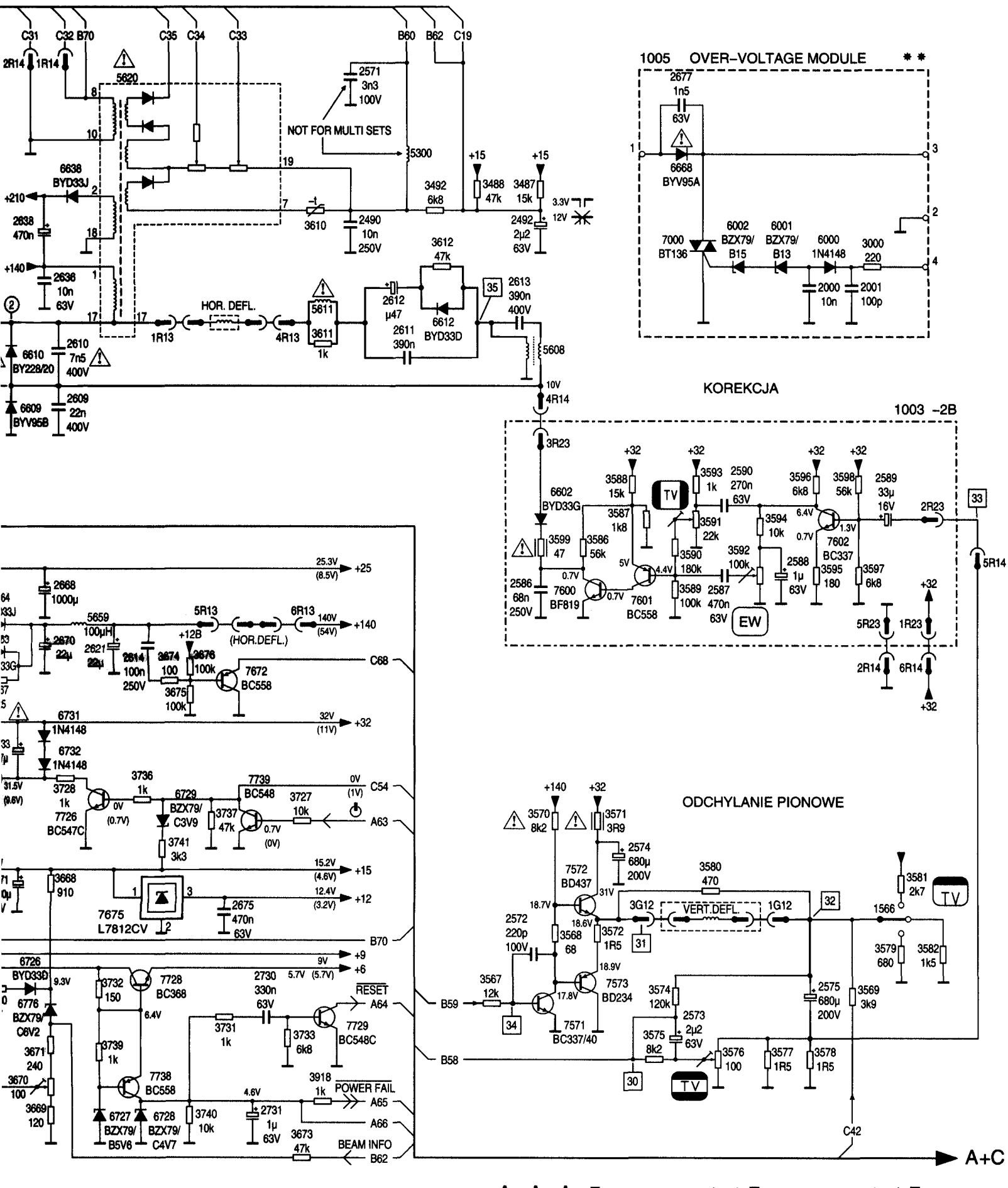
1005 OVER-VOLTAGE MODULE
KOREKCJA
1003 -2B
ODCHYLANIE PIONOWE
NOT FOR MULTI SETS
HOR. DEFL.
VERT.DEFL.
TV
EW
RESET
POWER FAIL
BEAM INFO
A+C

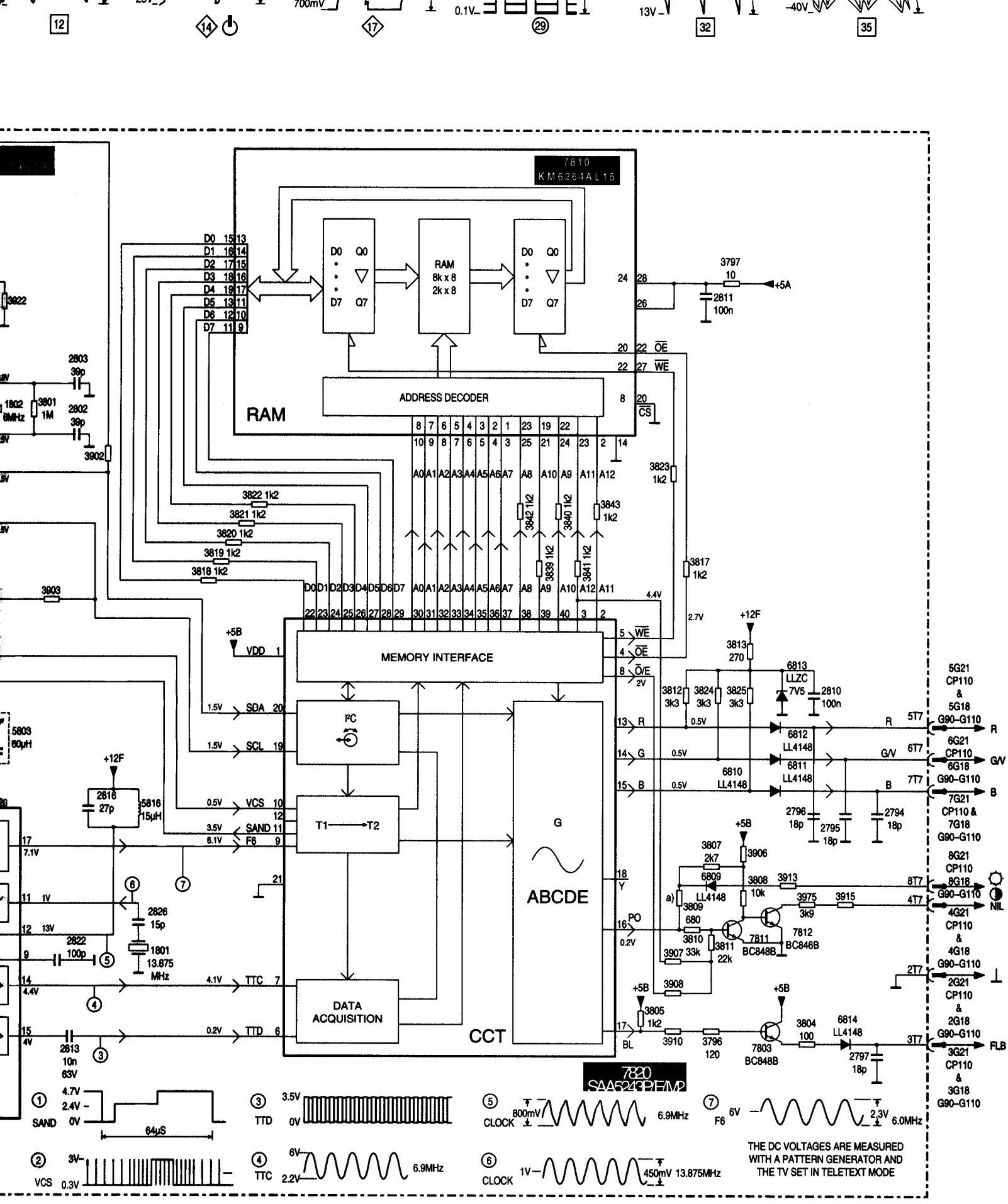
7810
KM6264AL15
RAM
8k x 8
2k x 8
ADDRESS DECODER
MEMORY INTERFACE
I²C
T1 → T2
DATA ACQUISITION
ABCDE
CCT
7820
SAA5243P/E/M2
THE DC VOLTAGES ARE MEASURED WITH A PATTERN GENERATOR AND THE TV SET IN TELETEXT MODE

trona 1/2

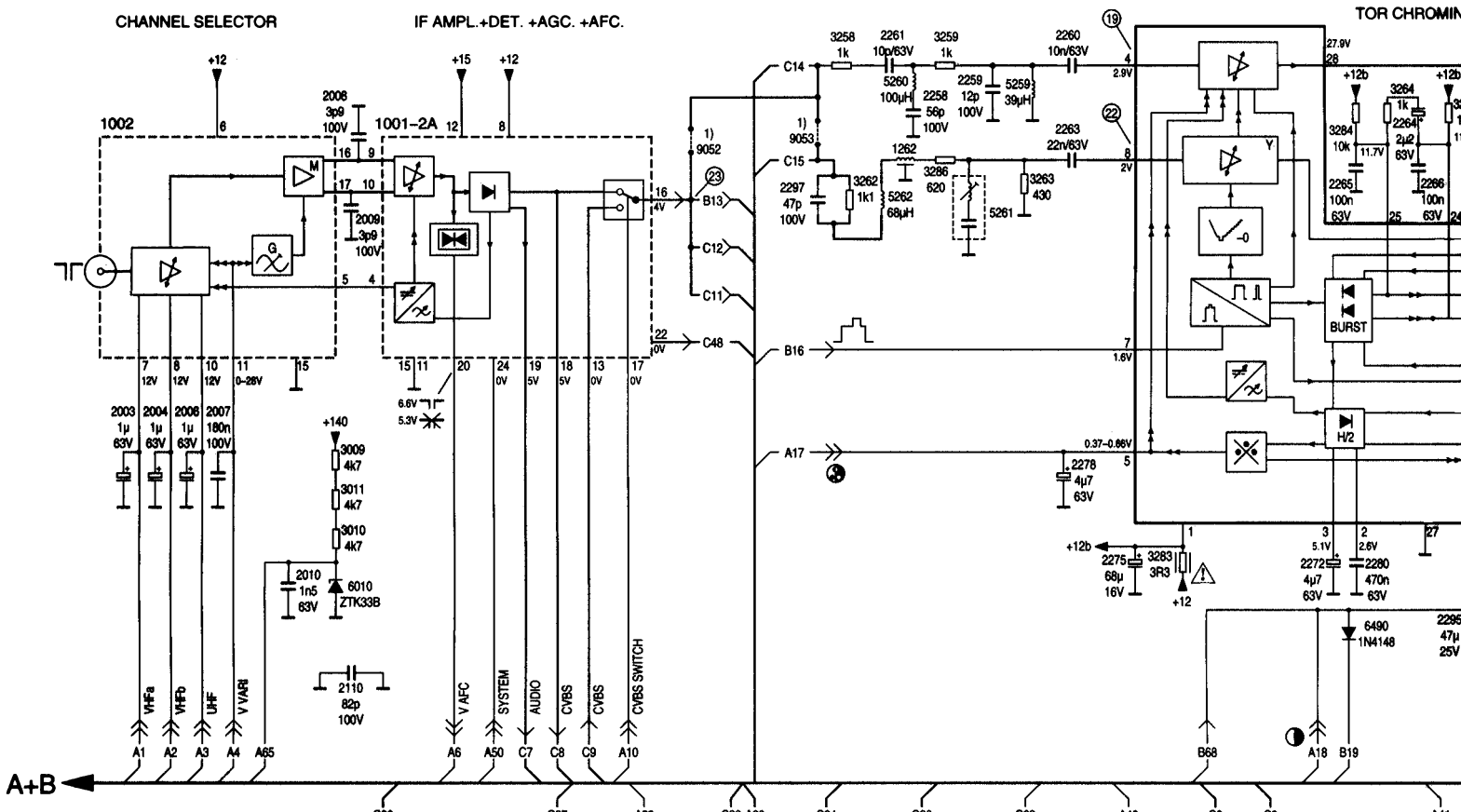

SCHEMAT C

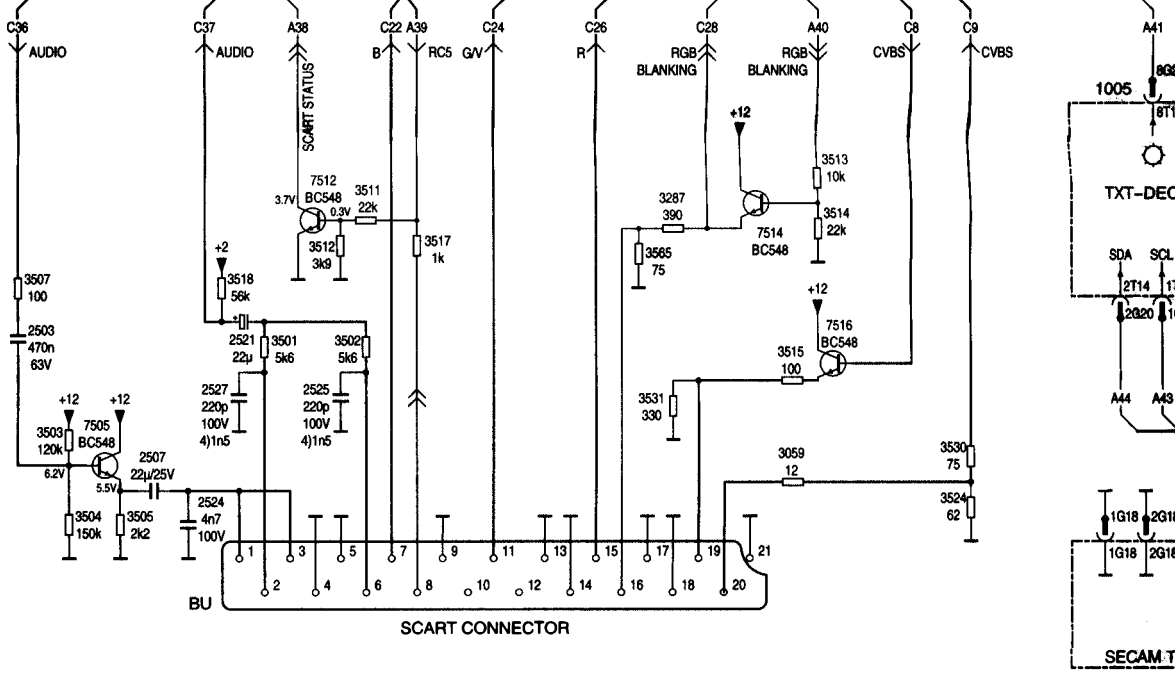

REMARKS:
1) -NOT PRESENT FOR PAL/SECAM SETS.
2) -FOR VERSION:

	BG 5.5MHz	I 6MHz	MULTI-FR 6.0MHz	P/S BG 6.5MHz
1103	-	X	-	-
1104	X	-	X	X
2109	-	-	X	X
5109	-	-	X	X
9039	X	X	-	-
X : PRESENT		- : NOT PRESENT		

3) -ONLY FOR MULTI-SETS
4) -ONLY FOR AMTSBLATT VERSION

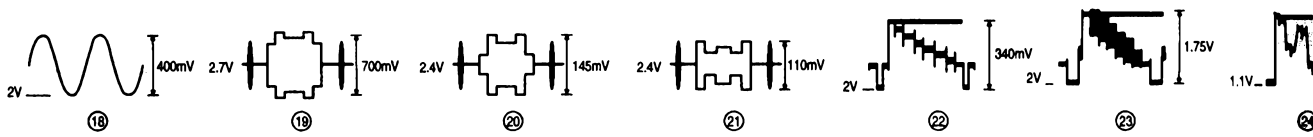

SCHEMAT A

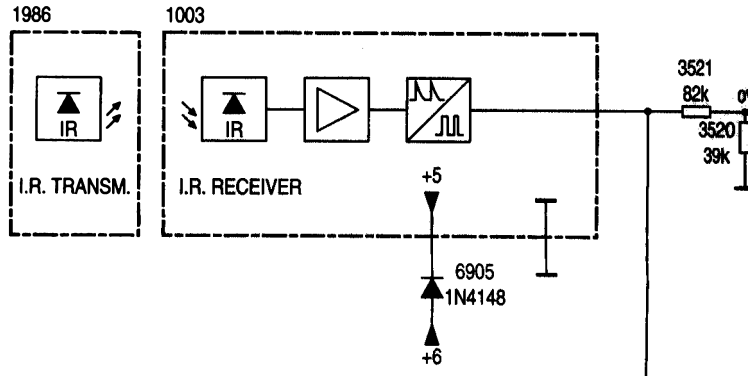

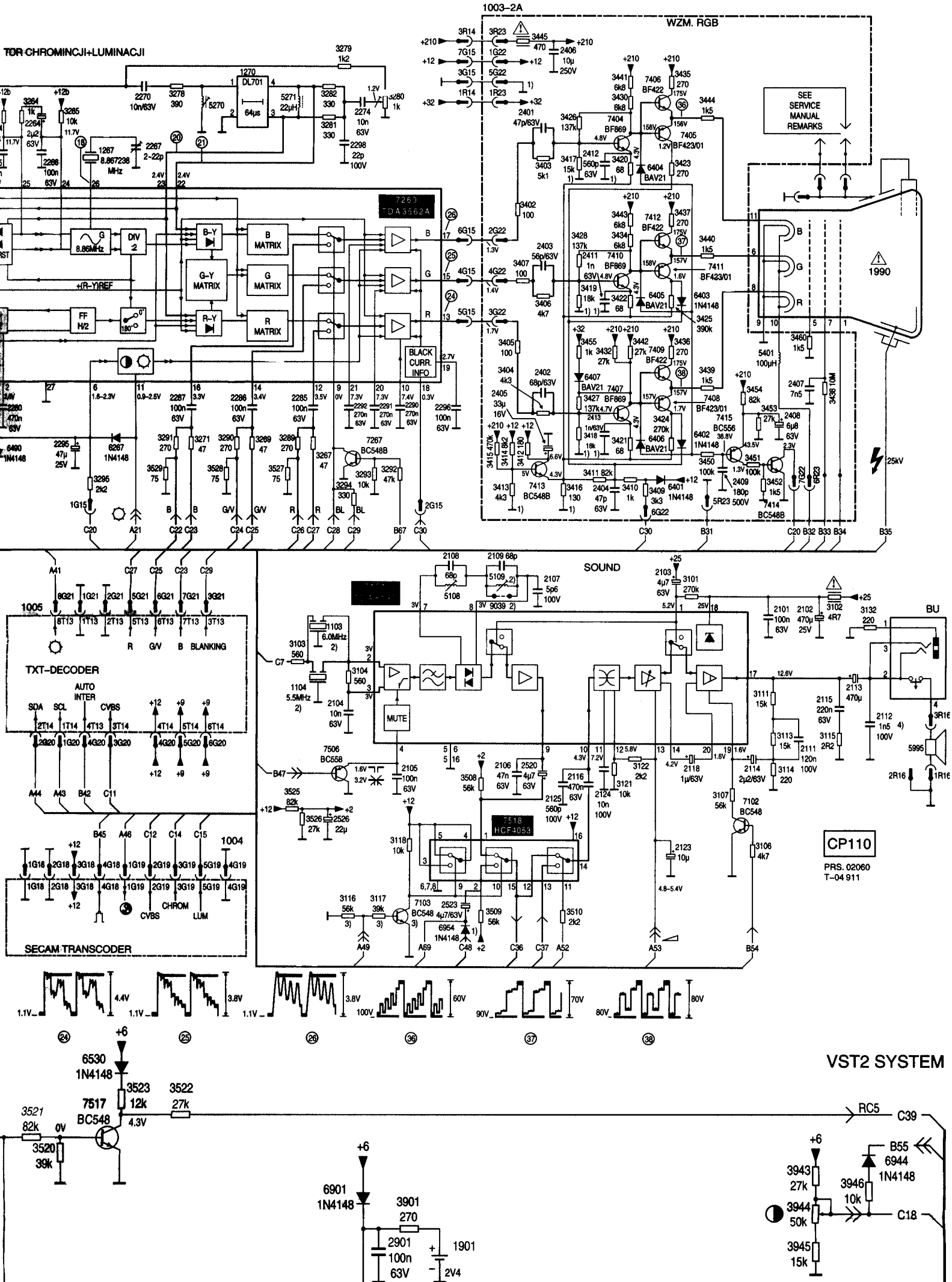
TDA3562A
WZM. RGB
1003-2A
SEE SERVICE MANUAL REMARKS
1990
TXT-DECODER
SECAM TRANSCODER
SOUND
HCF4053
CP110
PRS. 02060
T-04 911
VST2 SYSTEM

OTVC Philips chassis CP 110

strona 2/2

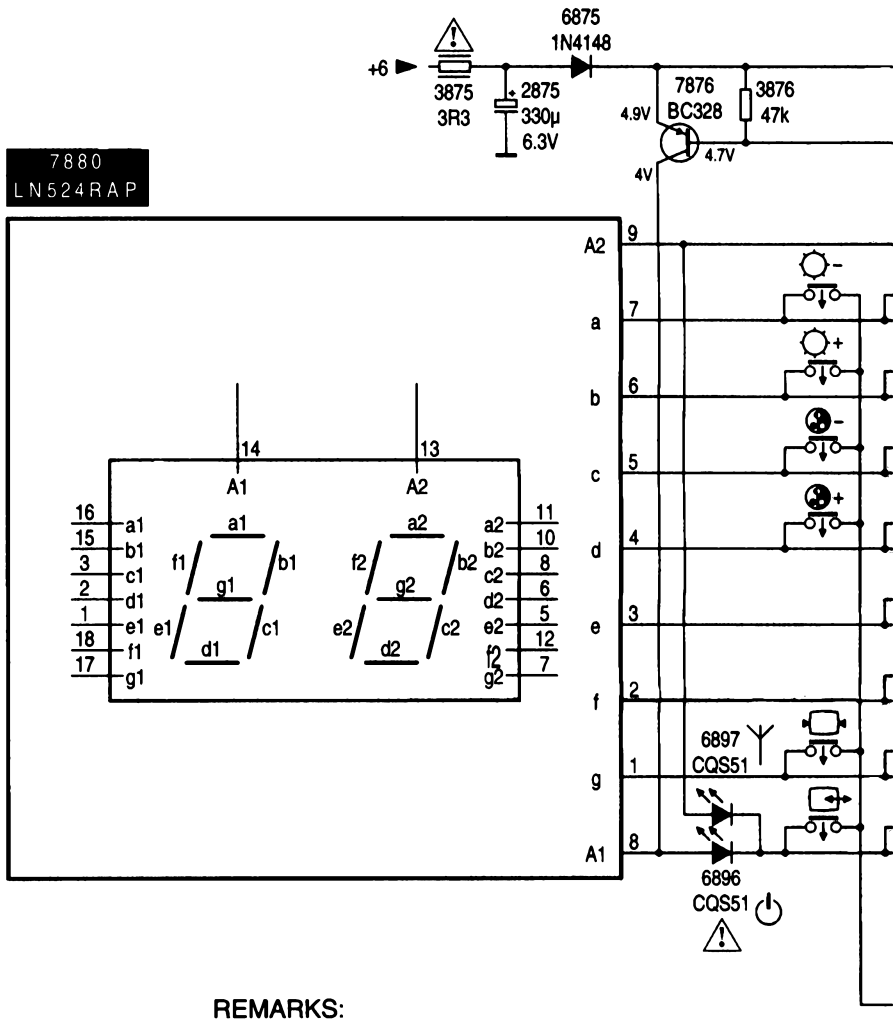

REMARKS:
1) PRESENT IN UHF-ONLY SETS
2) NOT PRESENT IN UHF-ONLY SETS
3) PRESENT IN MULTI-FRANCE SETS

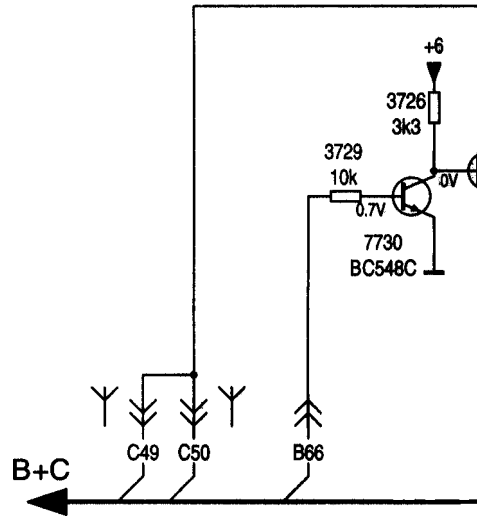

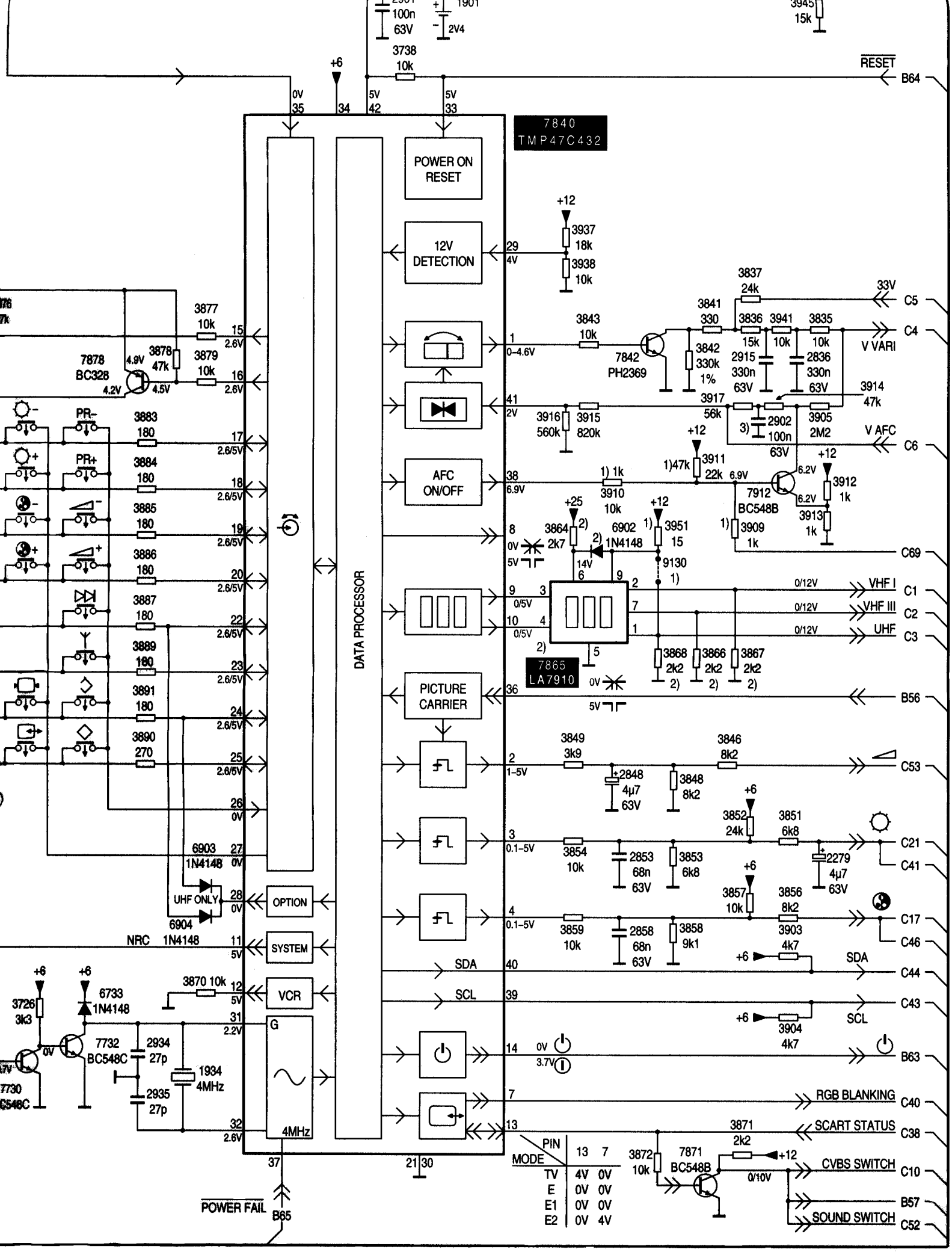
7840
TMP47C432
POWER ON RESET
12V DETECTION
AFC ON/OFF
PICTURE CARRIER
DATA PROCESSOR
OPTION
SYSTEM
VCR
4MHz
7865
LA7910
7842
PH2369
7912
BC548B
7878
BC328
7871
BC548B
7732
BC548C
6903
1N4148
6904
1N4148
6902
1N4148
6733
1N4148
1934
4MHz
RESET
B64
POWER FAIL
B65
SDA
SCL
VHF I
VHF III
UHF
V VARI
V AFC
CVBS SWITCH
SOUND SWITCH
RGB BLANKING
SCART STATUS
UHF ONLY
NRC
PR-
PR+
PIN
MODE
13
7
TV
E
E1
E2