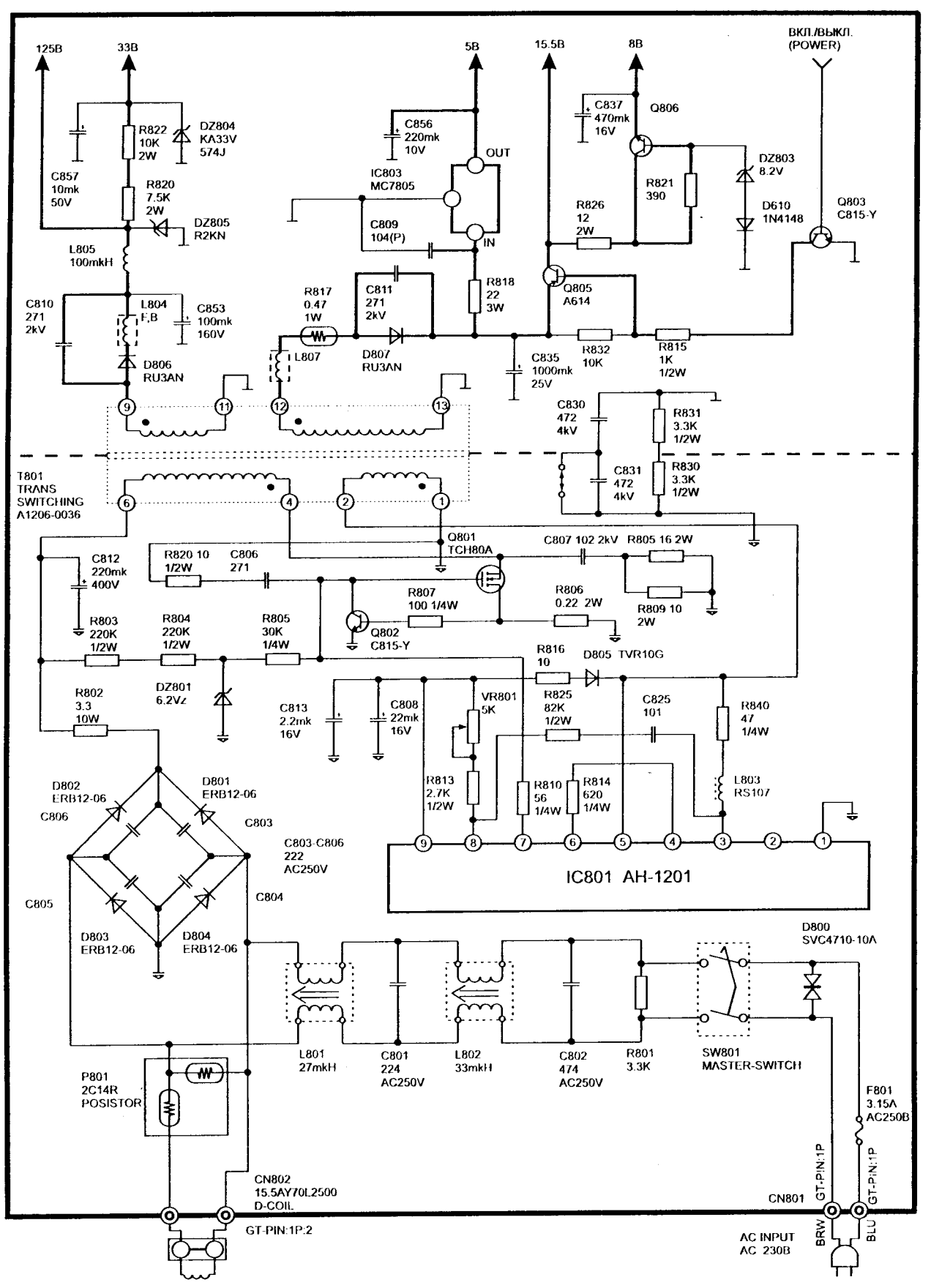
125В
33В
5В
15.5В
8В
ВКЛ./ВЫКЛ.
(POWER)
C857
10mk
50V
R822
10K
2W
DZ804
KA33V
574J
R820
7.5K
2W
DZ805
R2KN
L805
100mkH
C810
271
2kV
L804
F.B
C853
100mk
160V
D806
RU3AN
C856
220mk
10V
IC803
MC7805
OUT
IN
C809
104(P)
C837
470mk
16V
Q806
R821
390
DZ803
8.2V
D610
1N4148
Q803
C815-Y
R826
12
2W
Q805
A614
R817
0.47
1W
C811
271
2kV
R818
22
3W
L807
D807
RU3AN
C835
1000mk
25V
R832
10K
R815
1K
1/2W
C830
472
4kV
R831
3.3K
1/2W
C831
472
4kV
R830
3.3K
1/2W
T801
TRANS
SWITCHING
A1206-0036
Q801
TCH80A
C807 102 2kV
R805 16 2W
C812
220mk
400V
R820 10
1/2W
C806
271
R807
100 1/4W
R806
0.22 2W
R809 10
2W
Q802
C815-Y
R803
220K
1/2W
R804
220K
1/2W
R805
30K
1/4W
R816
10
D805 TVR10G
R802
3.3
10W
DZ801
6.2V
C813
2.2mk
16V
C808
22mk
16V
VR801
5K
R825
82K
1/2W
C825
101
R840
47
1/4W
R813
2.7K
1/2W
R810
56
1/4W
R814
620
1/4W
L803
RS107
D802
ERB12-06
D801
ERB12-06
C806
C803
C803-C806
222
AC250V
C805
C804
D803
ERB12-06
D804
ERB12-06
IC801 AH-1201
D800
SVC4710-10A
L801
27mkH
C801
224
AC250V
L802
33mkH
C802
474
AC250V
R801
3.3K
SW801
MASTER-SWITCH
P801
2C14R
POSISTOR
F801
3.15A
AC250B
CN802
15.5AY70L2500
D-COIL
GT-PIN:1P:2
CN801
GT-PIN:1P
GT-PIN:1P
BRW
BLU
AC INPUT
AC 230В