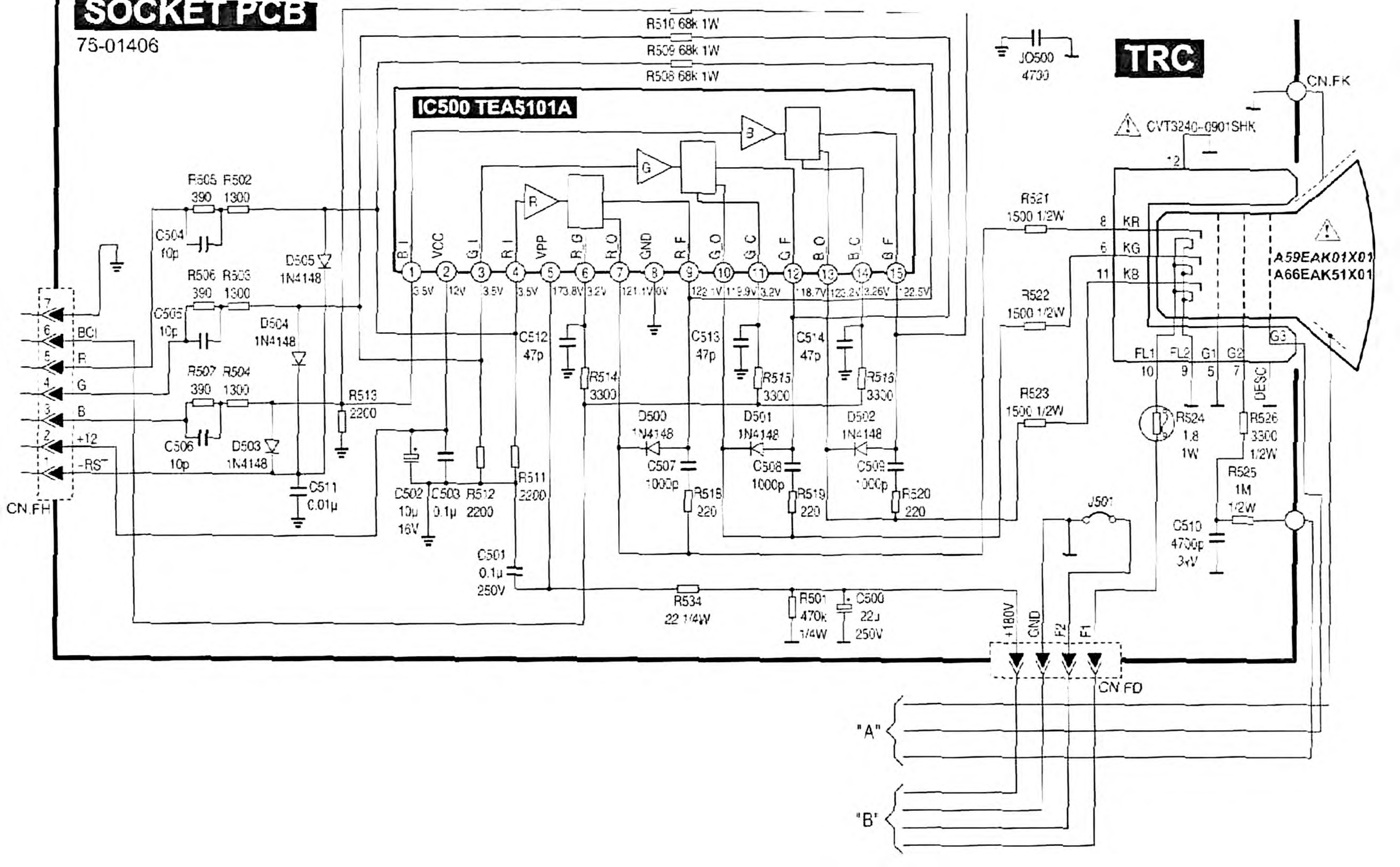
SOCKET PCB
75-01406
TRC
IC500 TEA5101A
R510 68k 1W
R509 68k 1W
R508 68k 1W
JO500
4700
CN.FK
CVT3240-0901SHK
12
A59EAK01X01
A66EAK51X01
R505 390
R502 1300
C504 10p
D505 1N4148
R506 390
R503 1300
C505 10p
D504 1N4148
R507 390
R504 1300
C506 10p
D503 1N4148
R513 2200
C511 0.01µ
CN.FH
7
6 BCI
5 R
4 G
3 B
2 +12
1 -RST
B_I
VCC
G_I
R_I
VPP
R_G
R_O
GND
R_F
G_O
G_C
G_F
B_O
B_C
B_F
B
G
R
1
2
3
4
5
6
7
8
9
10
11
12
13
14
15
3.5V
12V
3.5V
3.5V
173.8V
3.2V
121.1V
0V
122.1V
119.9V
3.2V
118.7V
123.2V
3.26V
122.5V
C512 47p
C513 47p
C514 47p
R514 3300
R515 3300
R516 3300
D500 1N4148
D501 1N4148
D502 1N4148
C507 1000p
C508 1000p
C509 1000p
R518 220
R519 220
R520 220
C502 10µ 16V
C503 0.1µ
R512 2200
R511 2200
C501 0.1µ 250V
R534 22 1/4W
R501 470k 1/4W
C500 22µ 250V
R521 1500 1/2W
R522 1500 1/2W
R523 1500 1/2W
8 KR
6 KG
11 KB
FL1 10
FL2 9
G1 5
G2 7
G3
DESC
R524 1.8 1W
R526 3300 1/2W
R525 1M 1/2W
C510 4700p 3kV
J501
+180V
GND
F2
F1
CN.FD
"A"
"B"

SANYO CEP2570D-00 chassis 2031

MAIN PCB
75-01391
CONTROL PCB
75-01408
SECAM / OPTION
CN1200
CN1260
TU250 UV916-PLL-IEC
SF201A TSF5315U
SF201B TSF5316U
IC200 TDA8341N6
IC290 LA7210
IC1680 TDA4935
IC100 SAB8032A
IC101 74HC573
IC102 27512 64K x 8
IC103 74HC4094
IC106 7407
IC900 TA8639P
IC901 4066
IC902 4052B
IC801 CNY17F-1
IC800 TDA4605
IC850 TDA8138
IC700 TDA8170N
M-I²C BUS
KEYBOARD BUS
ADRESS/DATA BUS
ADRESS BUS
SWITCH BUS
RGB BUS
DEFLECTION BUS
LIVE PARTS AREA
SCART 1
SCART 2
TO STEREO/DUAL SOUND PCB
TO DIGITAL VIDEO PCB
SPK1 8Ω 12W RIGHT
SPK2 8Ω 12W LEFT
SPK3 8Ω RIGHT TWEETER
SPK4 8Ω LEFT TWEETER
HEADPHONES
S1800 LGR4312
WIPER
F1800 2A 250V
SW1800
AC IN
IR1800
DL1800
PTC800
Q800 BUZ90A
Q600 TIP111
Q650 BU508A
Q700 BC337
Q751 BC558B
Q752 TIP111
Q753 BC558B
T600
T800
25" AT6010
28" AT6000/01

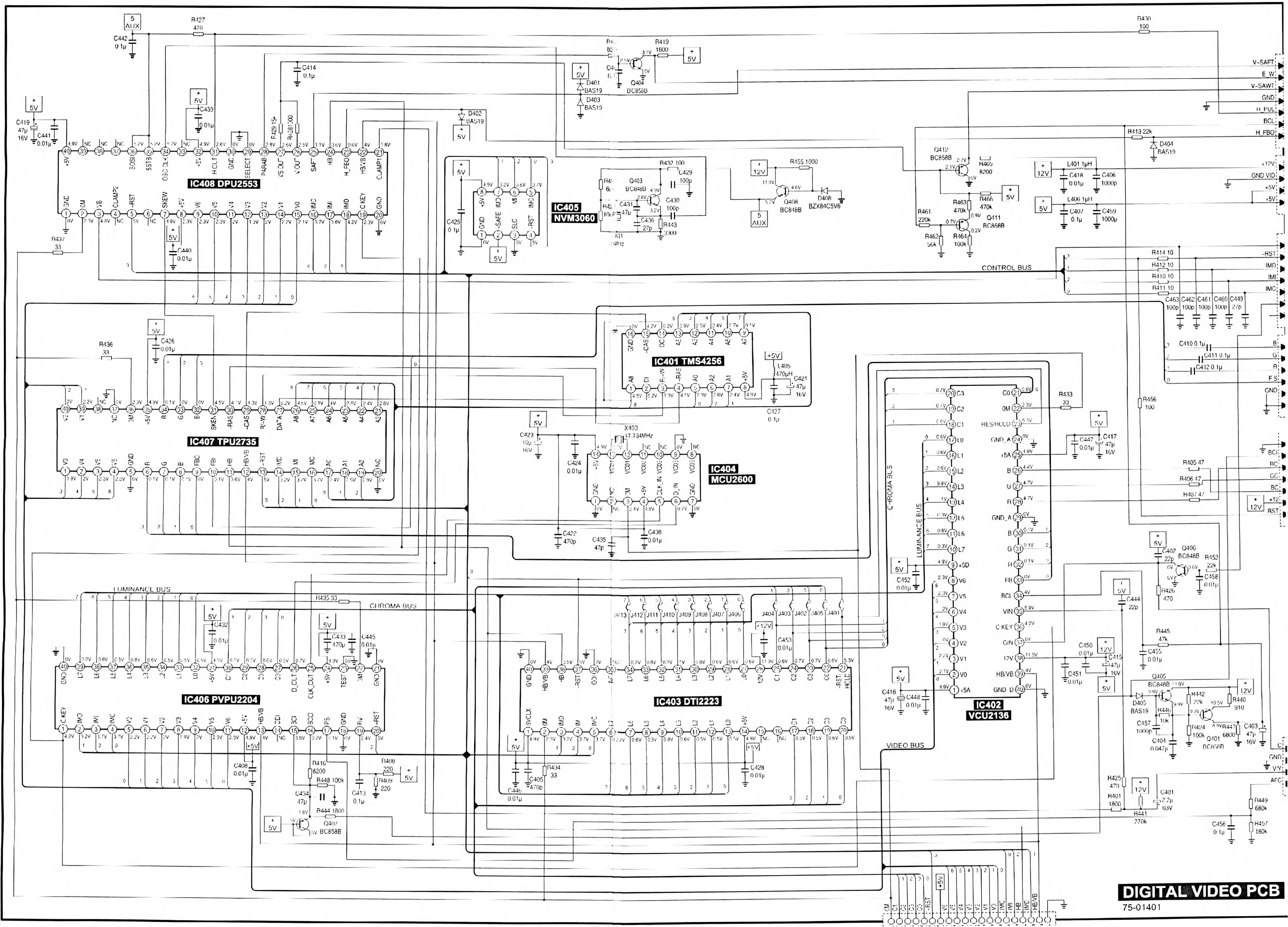
IC408 DPU2553
IC405 NVM3060
IC407 TPU2735
IC401 TMS4256
IC404 MCU2600
IC406 PVPU2204
IC403 DTI2223
IC402 VCU2136
CONTROL BUS
LUMINANCE BUS
CHROMA BUS
VIDEO BUS
X403 17.734MHz
Q404 BC858B
Q403 BC848B
Q408 BC848B
D408 BZX84C5V6
Q412 BC858B
Q411 BC858B
Q406 BC848B
Q405 BC848B
Q401 BC858B
Q407 BC858B
D401 BAS19
D402 BAS19
D403 BAS19
D404 BAS19
D405 BAS19
V-SAFT
E W
V-SAWT
GND
H_PUL
BCL
H_FBO
+12V
GND VID
+5V
-RST
IMD
IMI
IMC
B
G
R
FS
BCL
RC
GC
BC
+12
RST
C
GND
V/Y
AFC
CM
C1
C2
C3
C0
-RST
+5V
L6
L5
L4
L3
L2
L1
L0
IMC
IMI
HB
IMC
HBVB
5V
12V
AUX

DIGITAL VIDEO PCB

75-01401

75-1404

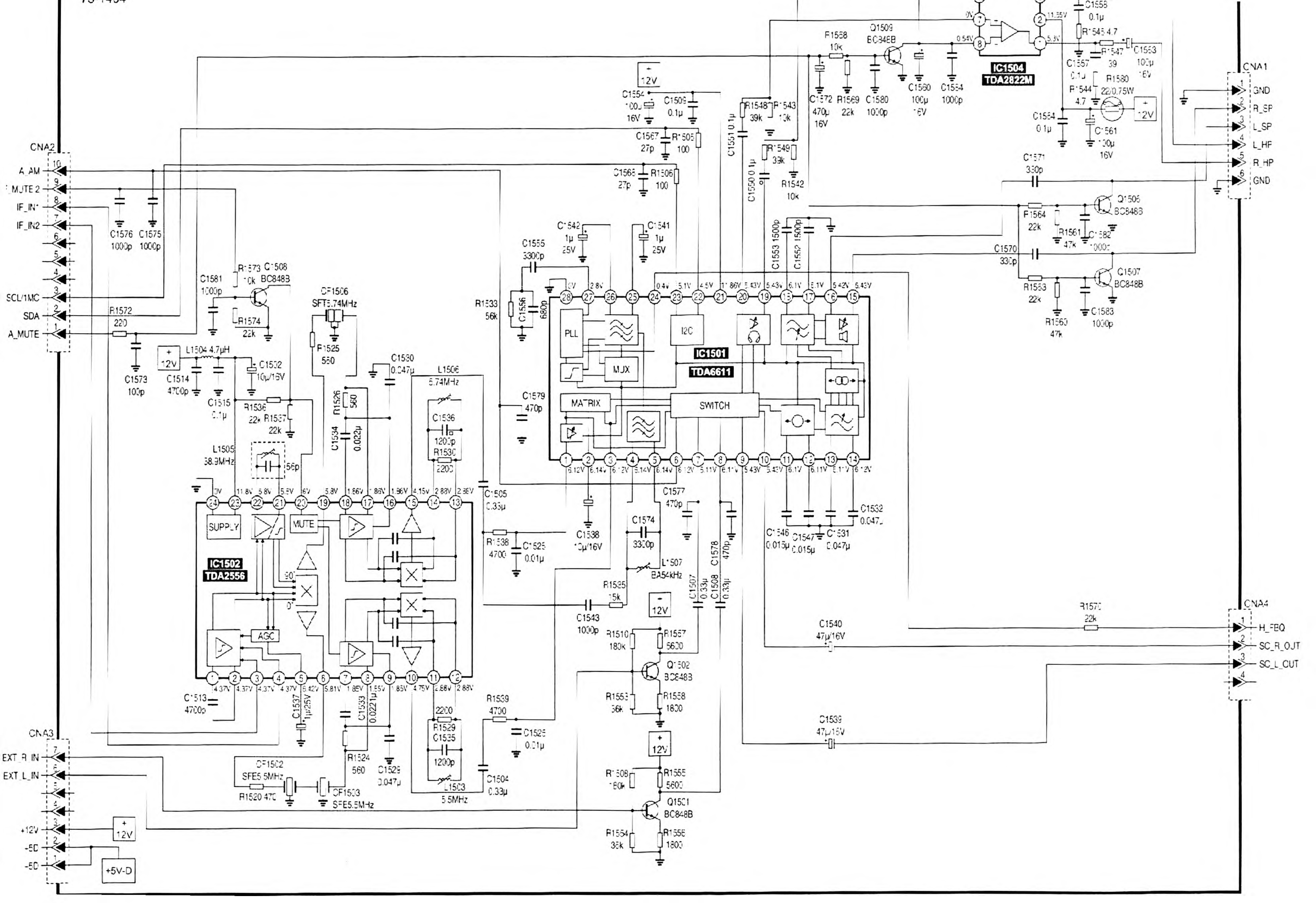
CNA1
GND
R_SP
L_SP
L_HP
R_HP
GND
CNA2
A_AM
MUTE 2
IF_IN1
IF_IN2
SCL/1MC
SDA
A_MUTE
CNA3
EXT_R_IN
EXT_L_IN
+12V
-5D
-5D
+5V-D
CNA4
H_FEQ
SC_R_OUT
SC_L_OUT
IC1501
TDA6611
IC1502
TDA2556
IC1504
TDA2822M
PLL
MUX
I2C
MATRIX
SWITCH
SUPPLY
MUTE
AGC
Q1509 BC848B
Q1506 BC848B
Q1507 BC848B
Q1508 BC848B
Q1502 BC848B
Q1501 BC848B
CF1506 SFT5.74MHz
CF1502 SFE5.5MHz
CF1503 SFE5.5MHz
L1504 4.7µH
L1505 38.9MHz
L1506 5.74MHz
L1507 BA54kHz
L1503 5.5MHz
R1568 10k
R1569 22k
C1572 470µ 16V
C1580 1000p
C1560 100µ 16V
C1564 1000p
C1558 0.1µ
R1545 4.7
R1547 39
C1563 100µ 16V
C1557 0.1µ
R1544 4.7
R1580 22/0.75W
C1561 100µ 16V
C1554 100µ 16V
C1509 0.1µ
R1548 39k
R1543 10k
C1551 0.1µ
C1567 27p
R1505 100
C1566 27p
R1506 100
R1549 39k
C1550 0.1µ
R1542 10k
C1571 330p
R1564 22k
R1561 47k
C1582 1000p
C1570 330p
R1563 22k
R1560 47k
C1583 1000p
C1553 1500p
C1552 1500p
C1542 1µ 25V
C1541 1µ 25V
C1555 3300p
C1556 680p
R1533 56k
C1579 470p
C1576 1000p
C1575 1000p
C1581 1000p
R1573 10k
R1574 22k
R1572 220
C1573 100p
C1514 4700p
C1515 0.1µ
C1502 10µ/16V
R1536 22k
R1537 22k
56p
R1525 560
R1526 560
C1534 0.022µ
C1530 0.047µ
C1536 1200p
R1530 2200
C1505 0.33µ
R1538 4700
C1525 0.01µ
C1538 10µ/16V
C1577 470p
C1574 3300p
R1535 15k
C1543 1000p
C1507 0.33µ
C1508 0.33µ
C1578 470p
C1546 0.015µ
C1547 0.015µ
C1531 0.047µ
C1532 0.047µ
R1570 22k
C1540 47µ/16V
C1539 47µ/16V
R1510 180k
R1557 5600
R1559 36k
R1558 1800
R1508 180k
R1555 5600
R1554 36k
R1556 1800
C1513 4700p
C1537 1µ/25V
C1533 0.022µ
R1524 560
C1529 0.047µ
R1529 2200
C1535 1200p
R1539 4700
C1526 0.01µ
C1504 0.33µ
R1520 470
90°
0°
+12V